NPS ARCHIVE
1968
DUFF, F.

INVESTIGATION OF METHODS TO REDUCE SUCTION AND DISCHARGE LOSSES OF A PERIPHERAL COMPRESSOR

By: F. D. Duff
F. E. Eissing

Supervisor: E. S. Taylor

Date: 17 May 1968

Thesis
D78346

DUDLEY KNOX LIBRARY
NAVAL POSTGRADUATE SCHOOL
MONTEREY CA 93943-5101

INVESTIGATION OF METHODS TO REDUCE SUCTION AND DISCHARGE LOSSES OF A PERIPHERAL COMPRESSOR

by

FRANKLIN DUANE DUFF
LIEUTENANT, UNITED STATES NAVY
B.S., United States Naval Academy
(1961)

and

FRANK EUGENE EISSING, III
LIEUTENANT, UNITED STATES NAVY
B.S., United States Naval Academy
(1963)

Submitted in Partial Fulfillment of the
Requirements for the Degree of
Naval Engineer and the Degree of
Master of Science in Mechanical Engineering
at the
MASSACHUSETTS INSTITUTE OF TECHNOLOGY

June, 1968

RPI Archive Thesis D-78346
0.08
Cuff, F.

LIBRARY
NAVAL POSTGRADUATE SCHOOL
MONTEREY, CALIF. 93940

Title: INVESTIGATION OF METHODS TO REDUCE SUCTION AND DISCHARGE LOSSES OF A PERIPHERAL COMPRESSOR

Authors: Franklin Duane Duff and Frank Eugene Eissing, III

Submitted to the Department of Naval Architecture and Marine Engineering and the Department of Mechanical Engineering on May 17, 1968, in partial fulfillment of the requirements for the Professional Degree, Naval Engineer and the Degree of Master of Science in Mechanical Engineering.

ABSTRACT

Information concerning the improvement of performance of peripheral compressors is very inadequate. The objectives of this study are as follows: (1) to evaluate certain methods of suction and discharge loss reduction in peripheral pumps; (2) to determine the streamline pattern from measurable machine parameters and; (3) to determine the effectiveness of the stripper section in controlling high pressure carry-over flow and its effect on the through-flow rate at high Mach numbers.

Losses in the inlet and exit sections are a significant portion of the overall compressor inefficiency and can be reduced by proper design of these openings to conform to the machine streamline pattern and thus offering resistance to the flow.

The loss-reduction methods are evaluated and found to increase maximum efficiency by as much as 6 per cent. Streamline directions can be calculated from specific machine variables and conform closely with those observed. The stripper section becomes less effective at higher Mach numbers and as much as 14 per cent of the through-flow is lost through flow carry over.

Thesis Supervisor: Edward S. Taylor

Title: Professor of Flight Propulsion

ACKNOWLEDGMENTS

The investigation presented here was conducted at the Gas Turbine Laboratory of the Massachusetts Institute of Technology. The persons who contributed to this project are numerous and our appreciation is extended to each. Those deserving special recognition for important contributions include Yuri Bondarenko for his work in designing and constructing the compressor and John Moore for his useful suggestions and assistance in carrying out the experiments. Special thanks are given also to Professor E. S. Taylor of the Department of Aeronautics and Astronautics, at the Massachusetts Institute of Technology, for his review and expert guidance of the work accomplished, and Professor S. C. Powell of the Department of Naval Architecture and Marine Engineering, at the Massachusetts Institute of Technology, for serving as reader for the department.

TABLE OF CONTENTS

PAGE

LIST OF FIGURES 1

LIST OF TABLES 2

CHAPTER

I. Introduction 3

II. Procedure 18

III. Results 23

IV. Discussion 34

V. Conclusions and Recommendations 39

APPENDIXES 43

APPENDIX A. Pump Dimensions and Constants 44

APPENDIX B. Nomenclature 45

APPENDIX C. Power Train Efficiency 47

APPENDIX D. Streamline Calculations 48

APPENDIX E. Machine Modifications 54

APPENDIX F. Diagram of Pump Dimensions and Photograph of Pump 55

BIBLIOGRAPHY 57

LIST OF FIGURES

FIGURE		PAGE
I.	Typical Performance Curves	4
II.	Typical Pump Construction	5
III.	Channel and Impeller Dimensions for Regenerative Analysis	8
IV.	Control Volumes for Regenerative Analysis	9
V.	Pump Power Distribution	14
VI.	Internal Performance Parameters from Regenerative Theory	15
VII.	Typical Compressor Performance Curves	16
VIII.	Experimental Setup	19
IX.	Pressure Tap and Temperature Reading Locations . .	20
X.	Experimental Pump ϕ-ψ Curve	25
XI.	Experimental Pump ϕ-η Curve	26
XII.	Streamline Plot	28
XIII.	Stripper Effectiveness vs. Pressure Ratio	29
XIV.	Compressor ϕ-ψ Curves for Mach Numbers of 0.28 and 0.34 with Correction for Stripper	30
XV.	Blow-up of Section of Figure XIV	32
XVI.	Change in Flow Rate for Original and Corrected vs. Head Coefficient	33
XVII.	Power Train Efficiency	47
XVIII.	Channel Head Rise vs. Channel Angle	49
XIX.	Channel Streamline Pressure Rise vs. Channel Angle	51
XX.	Pump Configurations	54
XXI.	Diagram of Pump Dimensions	55
XXII.	Photograph of Pump	56

LIST OF TABLES

Table

I. Maximum Efficiency Parameters for all Four Configurations

II. Streamline Data

I. INTRODUCTION

The peripheral type machine is referred to in the literature under varying names such as regenerative, friction, turbine, traction or drag, to list only a few; however, until the basic theory of the pumping mechanism is more firmly established, the authors prefer the impartial name of peripheral.

The principal operating feature of a hydrodynamic pumping unit of the peripheral type is the fact that it can develop, in a single rotor, high heads at low flow rates. At the present time the maximum efficiency of this pump type is in the range of 30 to 50 per cent and is not overly impressive when compared to other types of pumps. However, efficiency is very good when compared to other units in low specific speed ranges; and it has found many applications in industry.

The stable operating characteristics and extremely simple construction of the peripheral machine, coupled with its low specific speeds, make it particularly attractive for lubrication, control, filtering, booster, and cryogenic systems. The typical nature of peripheral pump performance curves is illustrated in Figure I.

The general construction features of a typical machine are shown in Figure II. The working fluid enters an inlet in the periphery where it is then given added energy by a slotted rotating disc as it travels around the pumping channel, then exits through the casing. Between the inlet and outlet is a stripper or septum which seals off the open channel between the higher pres-

FIGURE I

TYPICAL SHAPE OF PERIPHERAL PUMP
PERFORMANCE CURVES

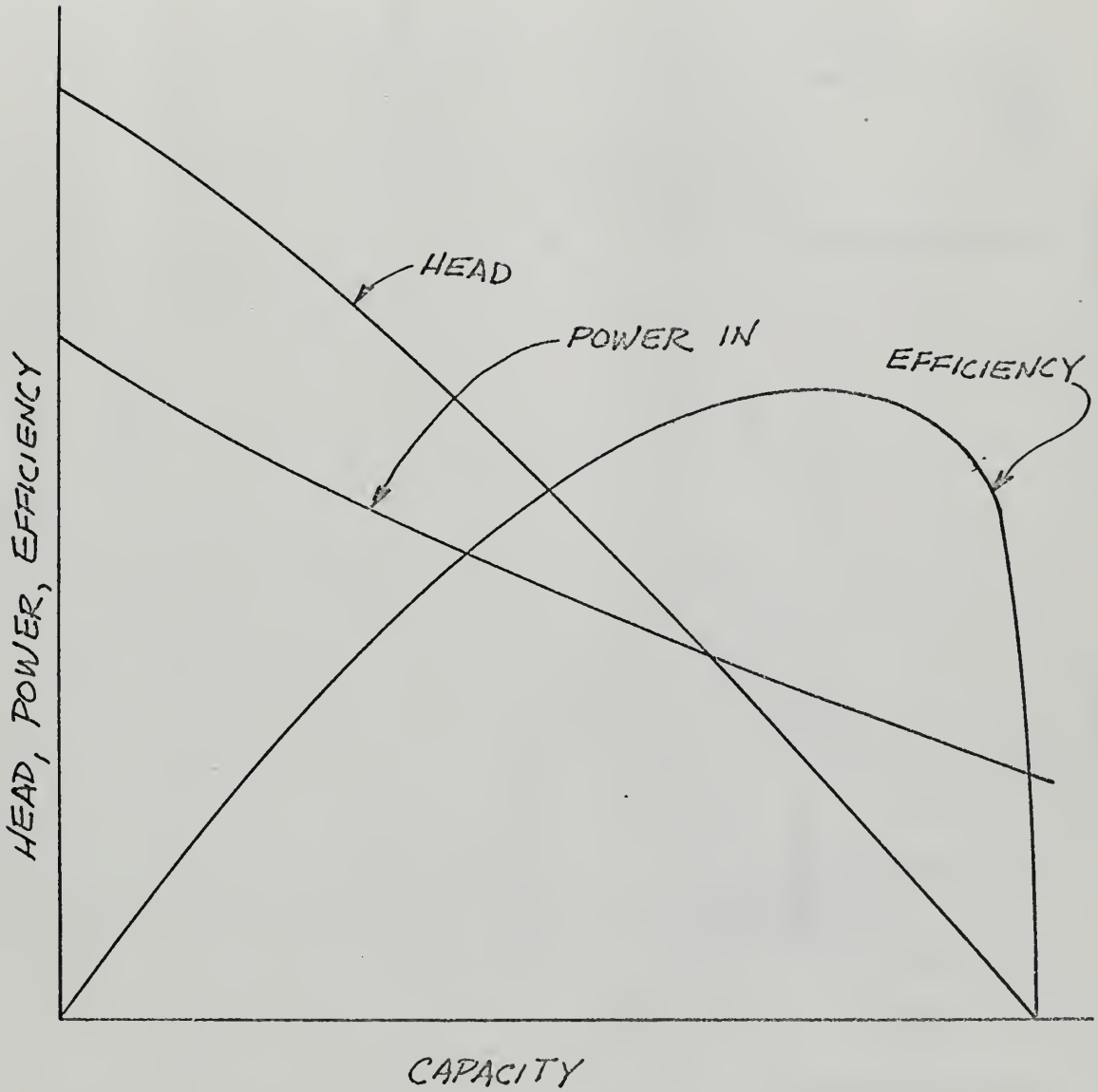

FIGURE II

GENERAL CONSTRUCTION OF A "HALF-PUMP"
PERIPHERAL PUMP

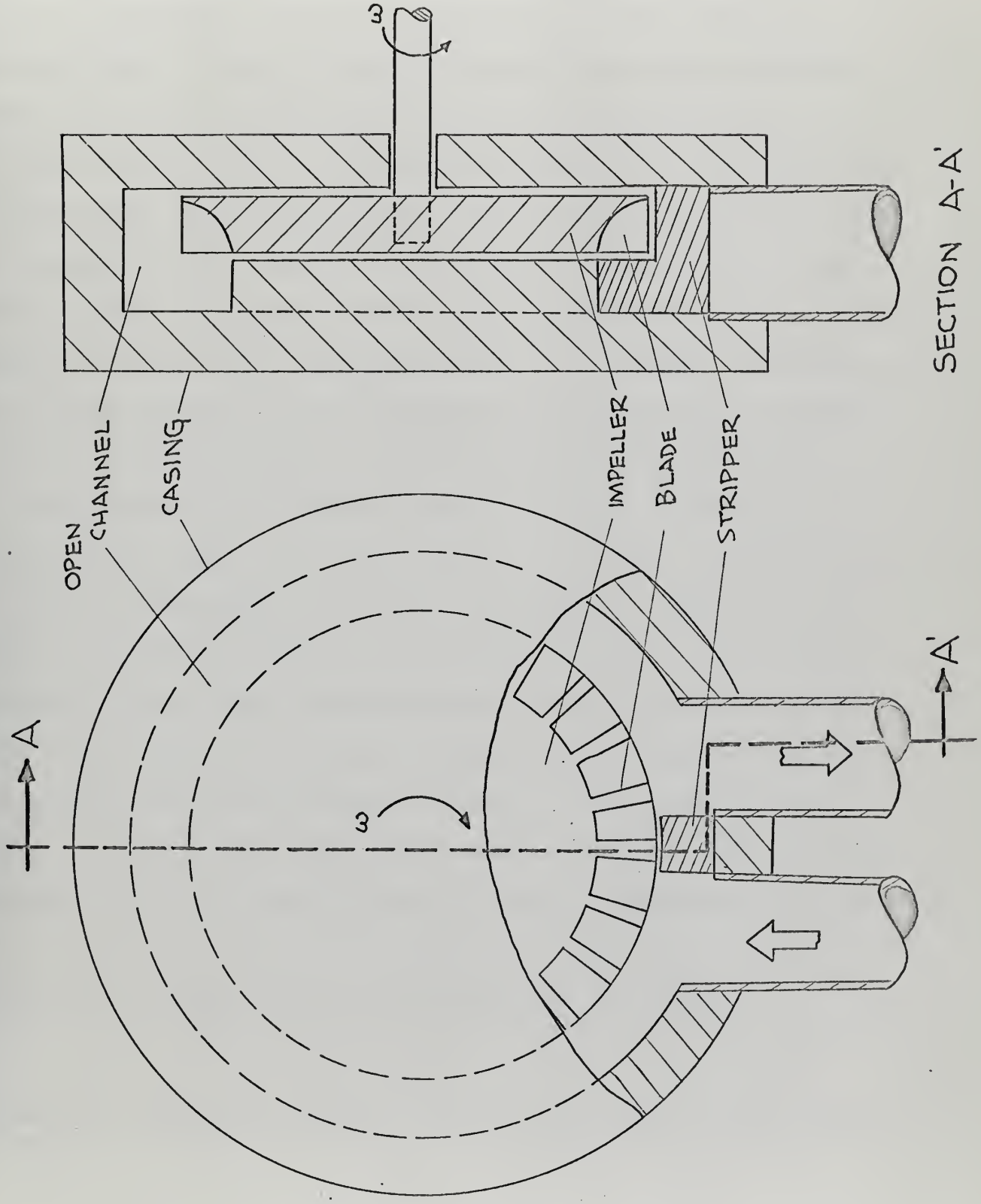

sure outlet and lower pressure inlet thus limiting pressure leakage between inlet and outlet.

There have been two hypotheses advanced concerning the principal of operation of the peripheral pump. Some authors (2, 3)* consider that a form of turbulent theory and friction between blade and fluid is applicable; whereas, an opposing group (6, 14, 15) maintains that the governing mechanism is connected with a circulatory flow formed in the fluid between the impeller and the casing channel. The authors feel that both theories have merit and that the actual mechanism is a combination of both hypotheses; however, the circulatory flow, or so-called regenerative theory, offers the best explanation and shows the closest agreement with experimental observations of the actual flow.

An explanation of the regenerative theory is necessary to acquaint the reader with such theory. The theory adjudges that the working fluid inclosed within the impeller blading volume is thrown out radially through centrifugal action of the rotating impeller on the fluid, and thus gains angular momentum. This fluid then enters the circular casing channel, losing a portion of its newly acquired momentum, since it is no longer being pushed by the impeller, and thus sustains the necessary pressure gradient. The fluid then flows in a helical path around the open channel until it re-enters the blade at or near the root and repeats the process until it is removed at the outlet.

*numbers in parentheses refer to references listed in the bibliography.

Oelrich and Wilson (6) developed an analysis where the helical transit of the fluid within the pump can be described by using two velocity components at each point in the fluid. These components are the tangential velocity component, V_t, and a component, V_c, which is in a meridional plane normal to V_t and characterizes the circulatory flow..

The through flow is defined by,

$$Q = \int_{A_c} V_t dA_c \quad , \qquad [1]$$

where A_c is the cross-sectional area of the open channel. A circulatory flow, Q_c, is associated with V_c.

A simple model was developed as shown in Figure III and Figure IV with the following assumptions made:

1. Steady flow.
2. Incompressible flow.
3. All adiabatic processes.
4. No internal leakage.
5. No end effects due to suction and discharge.
6. The entire pump flow may be characterized by the velocities V_t and V_c along a mean streamline.
7. Tangential pressure gradient is independent of radius.
8. Tangential pressure gradient is constant throughout the linear region.
9. All circulatory flow leaves the impeller at blade tips.
10. Friction-less.

FIGURE III

CHANNEL AND IMPELLER DIMENSIONS
FOR REGENERATIVE ANALYSIS, WILSON (6)

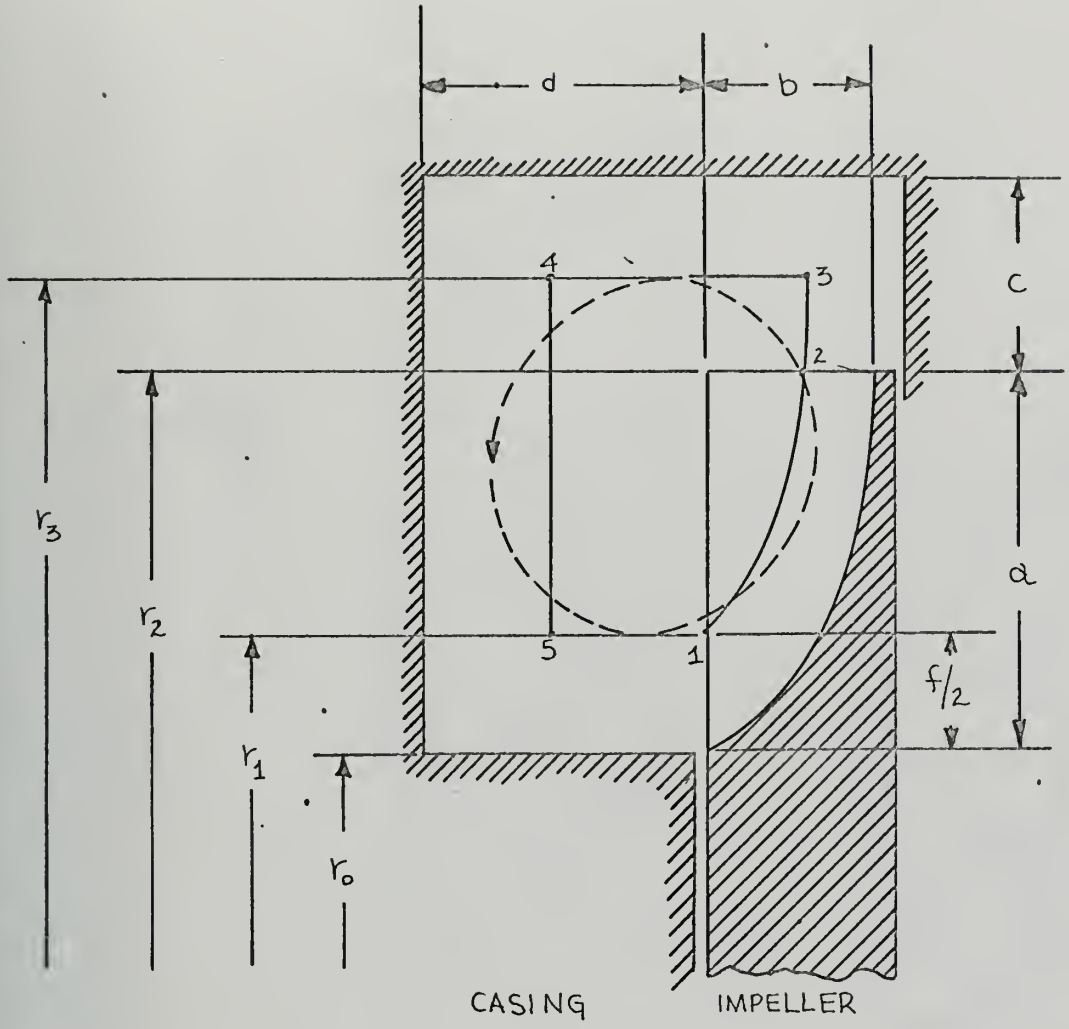

FIGURE IV

CONTROL VOLUMES FOR SECTION dθ
WILSON (6)

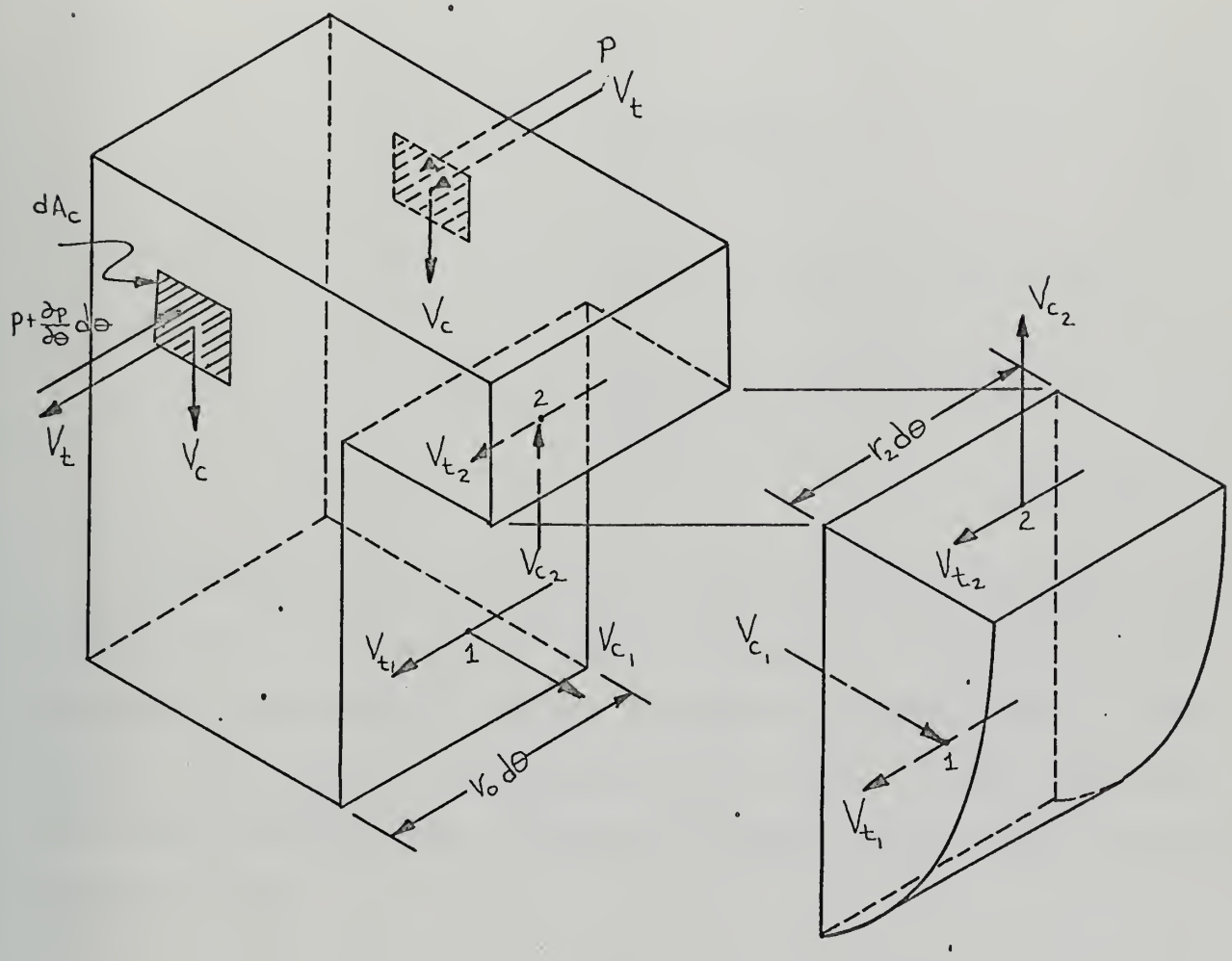

CHANNEL

IMPELLER SLOT

Referring to Figures III and IV,

$$dQ_c = V_{c1} r_1 f d\theta = V_{c2} r_2 b d\theta \,, \qquad [2]$$

$$\left.\begin{aligned} V_{t_2} &= \sigma U_2 \\ V_{t_1} &= \alpha U_1 \end{aligned}\right\} \,, \qquad [3]$$

where,

dQ_c = circulatory flow rate for section $d\theta$.

σ = blade "slip" factor.

α = blade entrance factor which is dependent upon Q.

U_1, U_2 = velocity of impeller at points 1 and 2 on Figures III and IV.

r_1, r_2, f, b, = pump dimensions on Figure III.

By applying the principle of conservation of angular momentum to the open channel volume in Figure IV, Oelrich (14) obtained a relationship for the tangential pressure rise in the pump. For simplicity in the analysis, wall friction and other irreversibilities were introduced as head losses. The equation produced was,

$$\frac{dp}{\rho} = \frac{dQ_c \omega (\sigma r_2^2 - \alpha r_1^2)}{r_g A_c} - gdH \,, \qquad [4]$$

where,

dp = pressure rise in incremental volume.

ρ = fluid density.

ω = angular speed of impeller.

r_g = radius of centroid of open channel = $\int_{A_c} r dA_c$

dH = incremental head loss due to tangential shear forces on open channel walls.

Simplification of equation [1] for a circulatory flow term by Wilson (6) and substitution of equation [4] resulted in the following expression for through flow,

$$Q = \frac{1}{2}\frac{r_2}{r_g} Q_{sb}\left[K_1\sigma + \frac{r_1^2}{r_2^2} K_2 \alpha\right] , \qquad [5]$$

where,

Q_{sb} = solid body flow in open channel = $r_g A_c \omega$

K_1, K_2 = dimensionless constants based on open channel geometry.

An expression for the pressure drop in the open channel, $p_2 - p_1$, in the meridional plane was obtained by utilizing equation [4] and the energy equation in the channel volume. Another expression for the pressure drop within the rotor blade, $p_2 - p_1$, in the same meridional plane was also obtained. These two equations were combined and simplified to produce,

$$gH_c = \omega^2\left[\sigma r_2^2 - \alpha r_1^2\right]\cdot\left[1 - \frac{Q}{Q_{sb}}\right] , \qquad [6]$$

where,

H_c = head loss in the circulatory flow from point 1 to 2 in the open channel.

Wilson (6) derived a usable expression for the overall

head of the pump by assuming that all tangential flow losses could be expressed as $k_t (Q/D^2)^2$, where k_t must be determined experimentally, and integrating equation [4] to obtain,

$$gH_t = \frac{Q_c}{Q_{sb}} \left(\sigma U_2^2 - \alpha U_1^2 \right) - k_t \left(\frac{Q}{D^2} \right)^2 , \qquad [7]$$

where,

H_t = overall tangential head delivered by the pump.

D = impeller diameter.

This lead to an efficiency expression between useful output power and the input power,

$$\eta = \frac{P \text{ output}}{P \text{ in}} = \frac{\rho Q g H_t}{P \text{ in}} = \frac{Q}{Q_{sb} + k_t \left(\frac{Q}{D^2} \right)^2 \frac{Q_{sb}}{gH_t}} , \qquad [8]$$

Wilson also assumed that the circulatory flow losses were comprised of only two terms; rotor blade entrance losses and frictional losses in the channel and rotor; and wrote the expression,

$$gH_c = \frac{(1 - \alpha)^2 U_1^2}{2} + k_c \left(\frac{dQ_c}{r_2 b d\theta} \right)^2 , \qquad [9]$$

where k_c is determined by experimental means.

Equations [5] through [9] are used to relate the basic pump parameters, α, Q, Q_c, H_c, H_t and η when the experimental constants σ, k_t, and k_c have been determined.

With the previous theoretical equations applied to a commercial pump tested by Lazo and Hopkins (11) and Lutz (12), the curves

of Figures V and VI were derived. They show interesting observations about the regenerative flow theory:

1. The circulatory flow was much larger than the through flow.

2. The fact that the blade entrance factor, α, became negative at low flows, indicated that flow reversal had occured in the open channel. (This was observed experimentally, also.)

3. The circulatory flow reached a maximum and then decreased as capacity was reduced.

4. The blade entrance losses are the largest source of irreversibilities.

5. The power output is nearly symmetrical about the one-half maximum flow point.

The discussion to this point has been only in the area of incompressible flow; therefore, it is logical to now consider the compressible region. The major work in this area has been done by Cates (16) at the Oak Ridge Gaseous Diffusion Plant, on various peripheral compressors. Interest centers mainly around high Mach number effects and channel area variation effects. The typical nature of high Mach number performance of a peripheral compressor are shown in Figure VII. It can be seen that high Mach numbers drastically reduce the performance of the peripheral compressor due to carry over, increased pressure ratio, choking of the flow, and clearances, to name only a few possibilities.

There is minimal information on inlet and exit effects on compressor performance since the method of determining these effects is through extensive experimentation. The effect of the blade volume passing through the stripper from high pressure to low pressure has not been evaluated and its effect on the through

FIGURE V

PERIPHERAL PUMP POWER DISTRIBUTION
FROM REGENERATIVE THEORY, OELRICH (14)

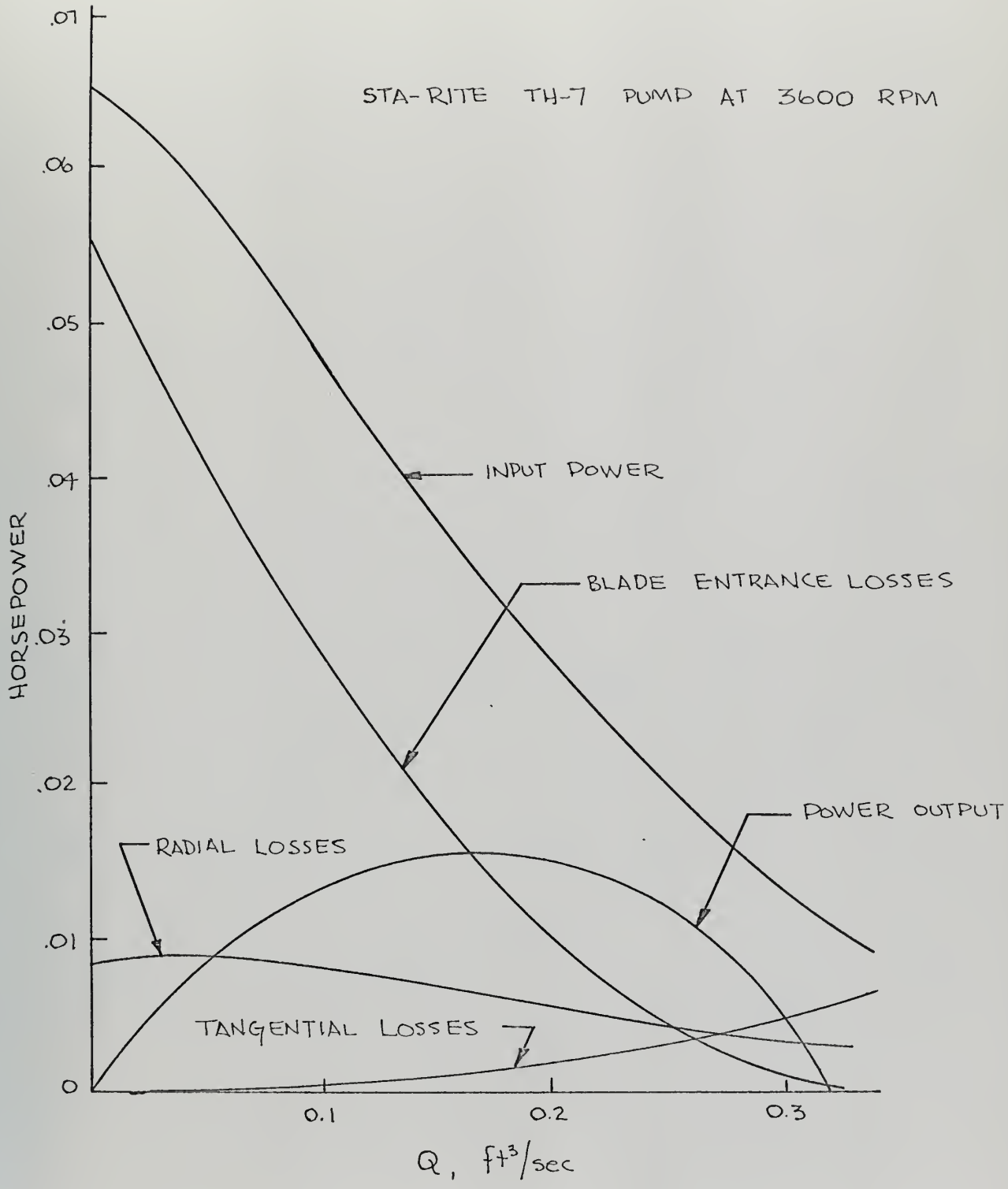

FIGURE VI

INTERNAL PERFORMANCE PARAMETERS
FROM REGENERATIVE THEORY, OELRICH (14)

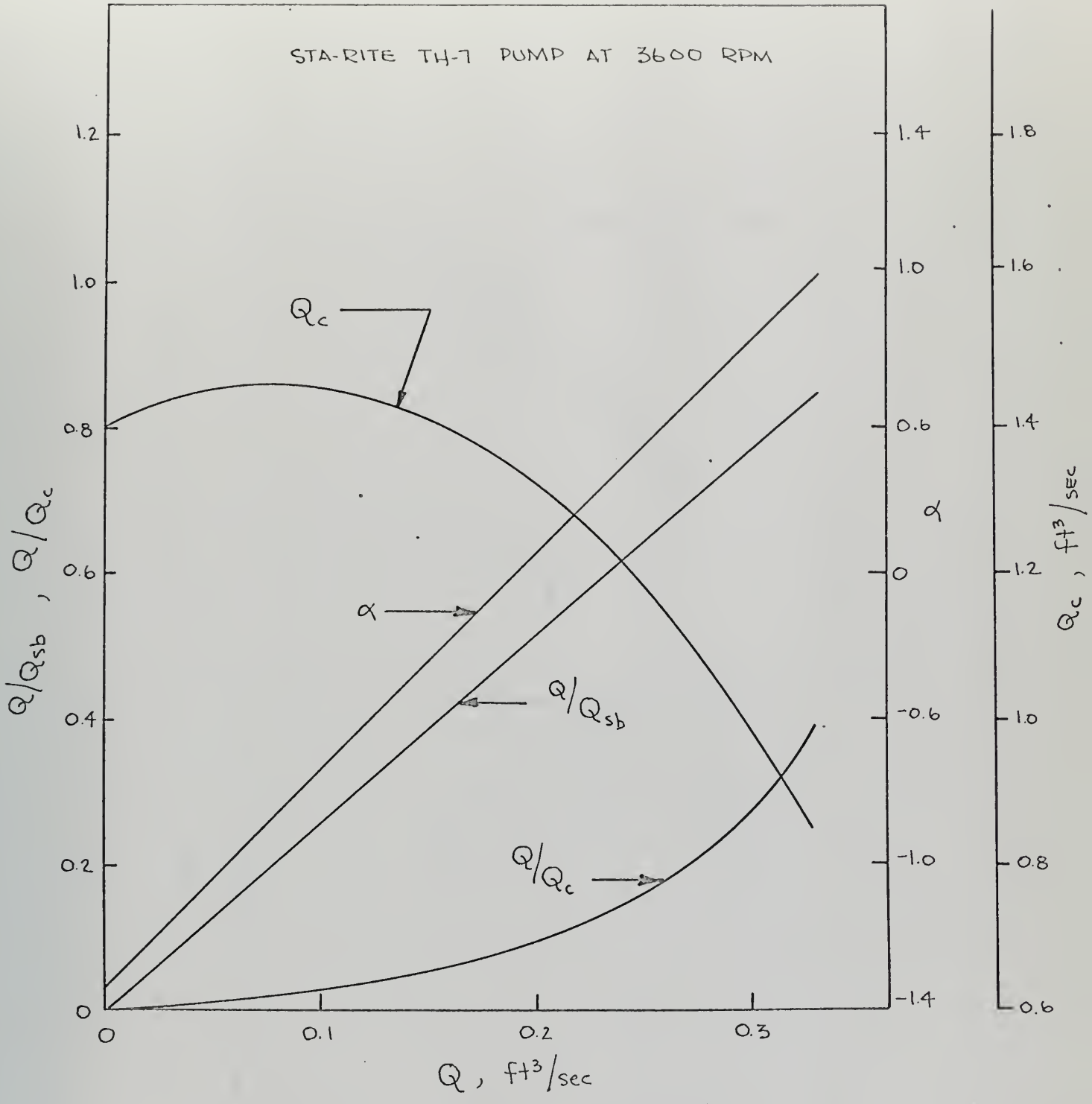

FIGURE VII

EFFECT OF MACH NUMBER
ON COMPRESSOR PERFORMANCE

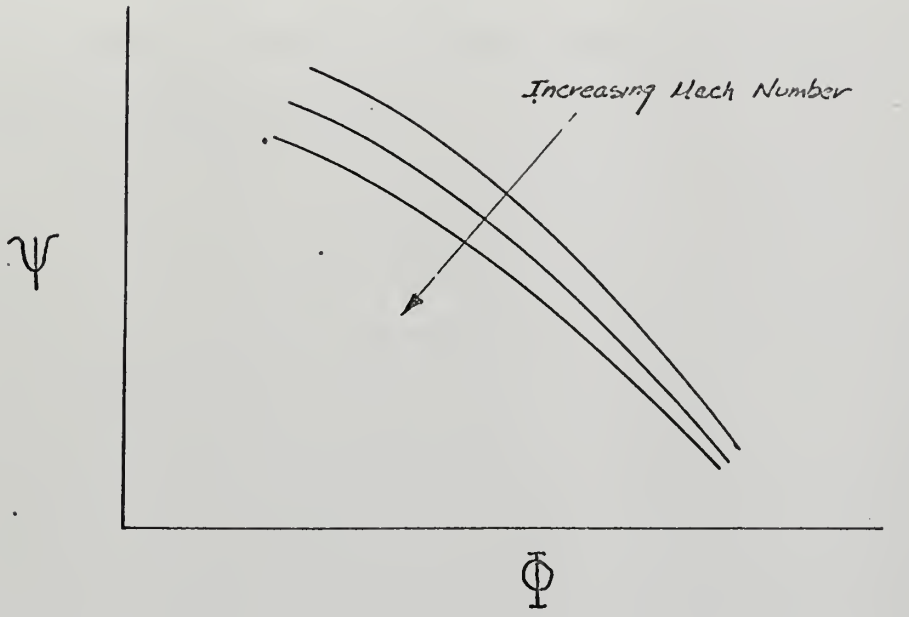

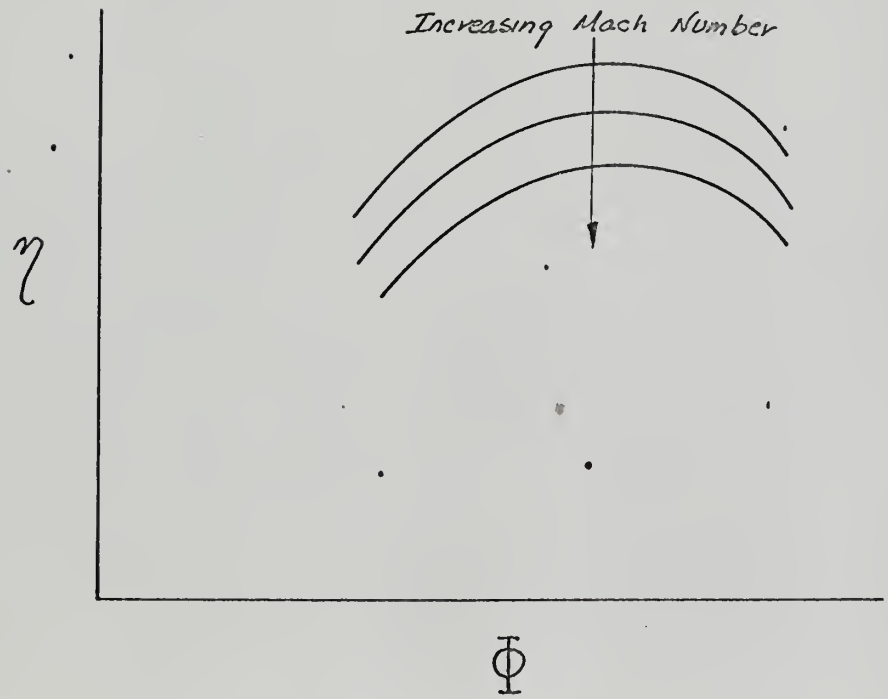

flow rate is thought to be significant.

Even though the flow is turbulent, it does follow an orderly streamline pattern; and, if this streamline can be predicted from characteristic flow measurements, it may be possible to improve performance by suitably configurating the channel to match the streamline characteristics.

II. PROCEDURE

The experiments were conducted utilizing an 11 inch diamter "half-pump" peripheral machine designed and built by Yuri A. Bondarenko, a Russian exchange student at the Massachusetts Institute of Technology in 1966. The pump was powered by a 5 horsepower D.C. motor rated at 3,450 rpm. Experimental setup is shown in Figure VIII and the pump in Appendix F.

The pump was operated at various speeds to obtain data at different impeller tip Mach numbers as defined by,

$$M_{t'} = \frac{V_{t'}}{\sqrt{k g_c R T_{t'}}} \quad , \qquad [10]$$

where,

$V_{t'}$ = tip velocity = $(\omega r)_{t'}$

$T_{t'}$ = temperature at tip

Pressure and temperature readings were taken at various locations in the pump, as indicated in Figure IX, for varying speeds and flow rate. The flow rate was measured by a 0.75 inch orifice in the suction pipe with flow controlled by a throttle valve located in the discharge pipe.

Input power was measured by volt-ampere relationships for the driving motor with overall power train efficiency as shown in Appendix C as a function of motor armature current.

Four modifications were incorporated into the pump (Appendix E) and each was compared with the original unit by plotting

FIGURE VIII

EXPERIMENTAL SETUP

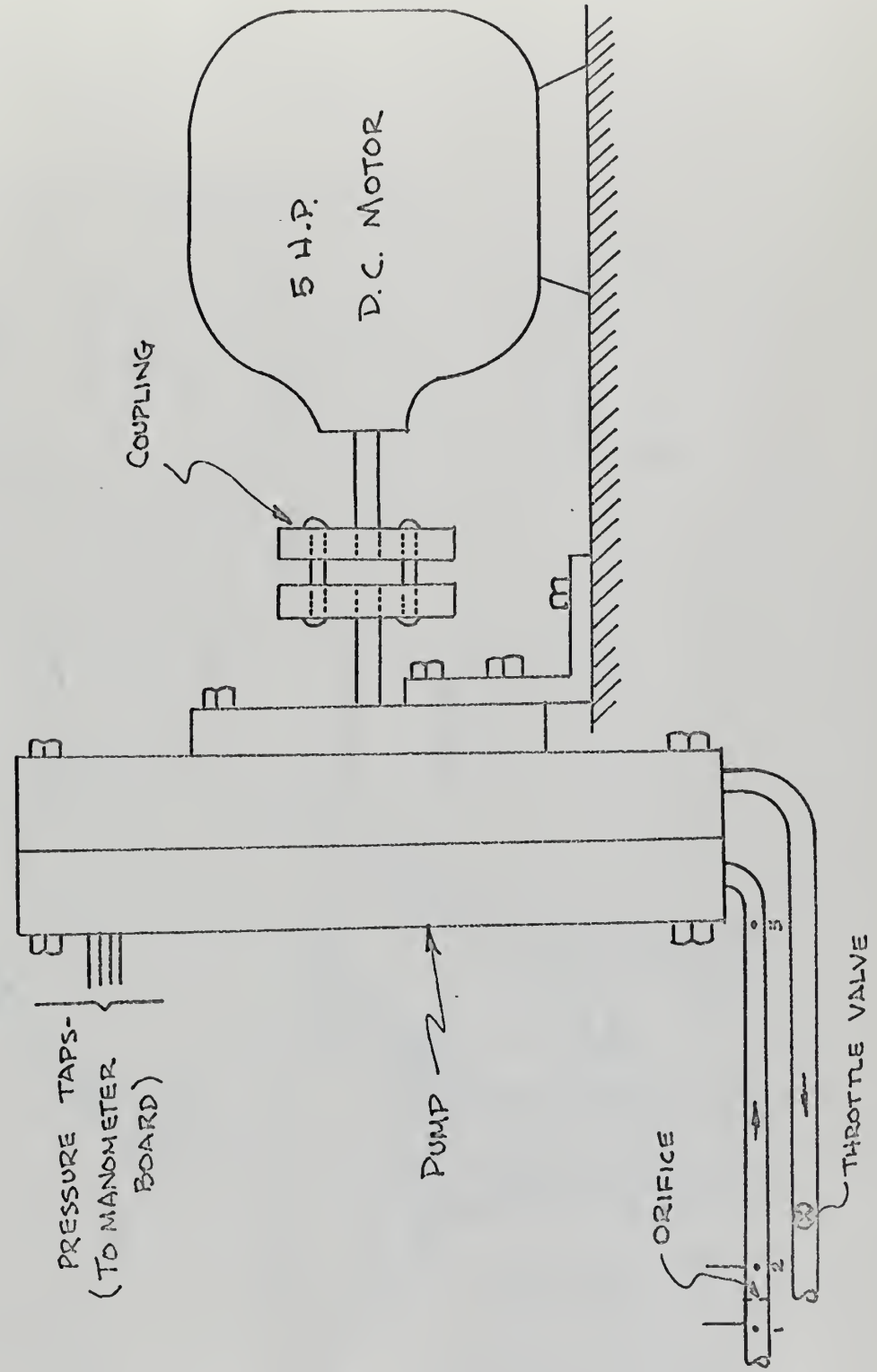

FIGURE IX

PRESSURE TAP LOCATIONS

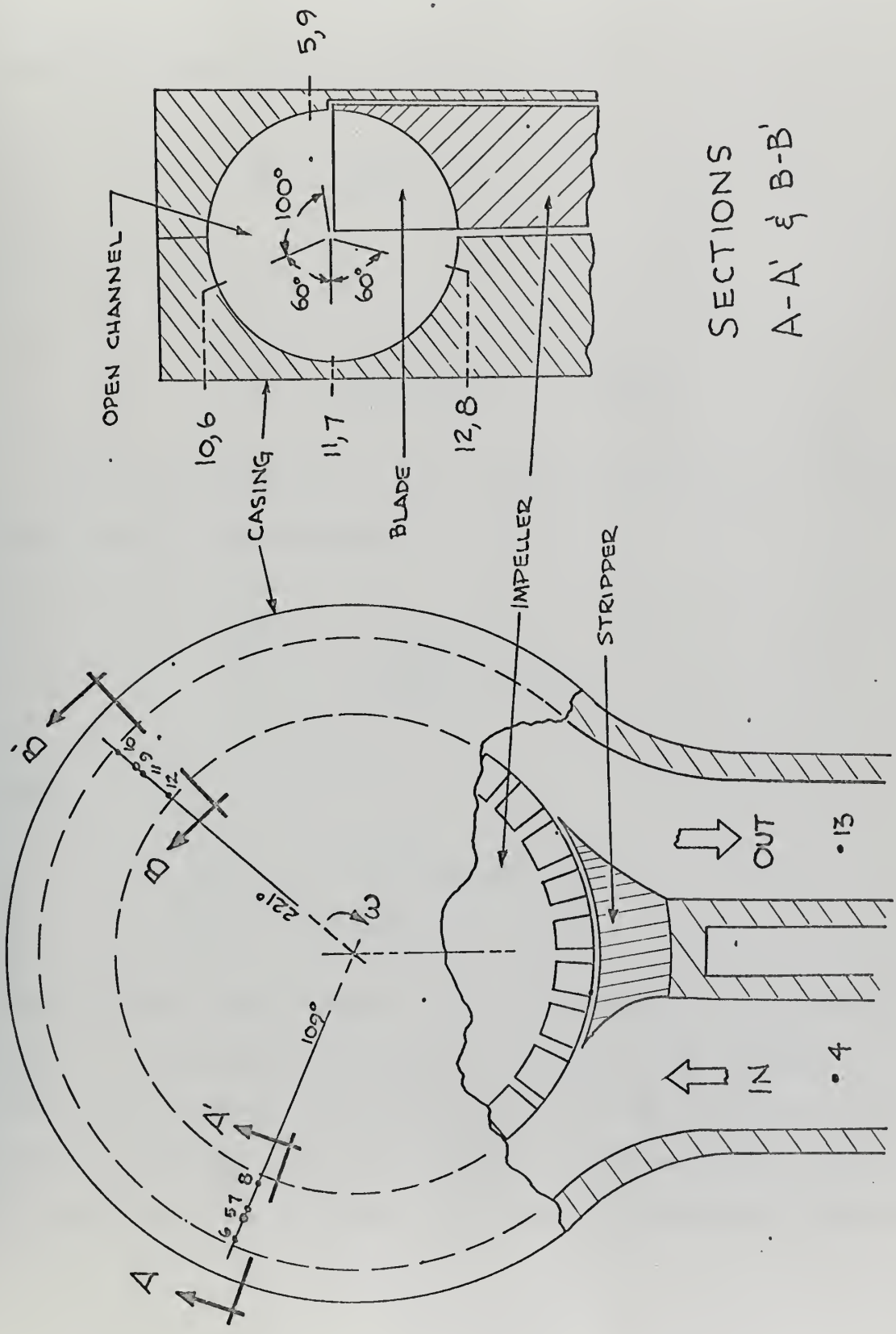

curves of non-dimensional flow rate, Φ ,

$$\Phi = \frac{Q}{\omega D^3} \quad , \qquad [11]$$

non-dimensional head rise, Ψ ,

$$\Psi = \frac{g_c H_t}{\omega^2 D^2} \quad , \qquad [12]$$

and pump efficiency, η ,

$$\eta = \frac{\text{Power out}}{\text{Power in}} = \frac{\rho g_c Q H_t}{\text{P in}} \quad , \qquad [13]$$

The effectiveness of the stripper section, ξ , was evaluated from the relationship,

$$\xi = \frac{Q}{Q + \left(\frac{p_2}{p_1} - 1\right) B_v \omega} \quad , \qquad [14]$$

where,

p_2/p_1 = total pressure ratio

B_v = blade slot volume

for different Mach numbers and plotted against compressor pressure ratio. The difference in ϕ at a specific ψ between two different Mach numbers was evaluated in the original form and compared to that ϕ - ψ curve obtained when corrected for the stripper loss due to carry-over flow, to determine the degree

that the stripper affects the total flow with changes in Mach number. All data from this portion was obtained from reference (17).

Streamline directions were observed at only 2,000 rpm. at maximum flow rate. Directions were observed with string probes inserted through holes in a plastic casing cover. The procedural calculations for streamline direction are shown in Appendix D.

III. RESULTS

Evaluation of performance is best done with the use of dimensionless variables such as Φ, Ψ, η, and pressure ratio. In Figures X and XI the original pump performance is plotted with the three other pump configurations used. The four basic pump configurations are shown in Appendix E. All modifications were accomplished with a self-hardening epoxy resin so that when the bonding surface was lightly oiled the hardened epoxy form could be removed intact without altering the original clearances.

No configuration showed any major alteration in head-flow characteristics, as seen in Figure X; so, all efficiency changes were assumed to be the effect of power characteristics as shown in Table I.

TABLE I

Configuration	N_s	P_o @ η max (hp.)	P in @ η max (hp.)	η max
1. (original)	8	.090	.180	50.3
2.	8	.093	.180	51.7
3.	8	.090	.170	52.3
4.	8	.084	.156	53.8

Configuration 2 consisted of effectively blocking the open channel portion of the exit to allow only the flow leaving the impeller blades to be removed at the exit.

Configuration 3 was a hybrid of 2, in that the open channel leading to the exit was gradually contoured for approximately one

helical streamline path to allow the flow to concentrate within the blade volume such that the flow pattern at the exit region would be altered from helical to purely radially outward flow.

Configuration 4 was coupled with 3 in an effort to suppress the carry-over flow from the blading volume and consisted of blocking the rotor portion of the inlet and introducing the incoming flow into the open channel side of the impeller blades to more effectively induce circulatory flow in the pump.

As can be seen from Figure XI, the fourth configuration increased the pump efficiency from the original of 50.3 per cent to 53.8 per cent or a gain of 6.9 per cent in overall efficiency.

The investigation into the streamline path for one pass through the open channel is discussed and calculated in Appendix D. The results of these calculations are shown in Figure XII and Table II. From Figure XII it can be seen that over half the through flow, Q, occurs in the upper third of the open channel cross-section and explains why there was only a small decrease in Q in configurations 2, 3, and 4, although a portion of the exit area was blocked off. This streamline in Figure XII is for only one condition of flow (maximum efficiency at 2,000 rpm on original machine) and no reverse flow has yet occured. When reverse flow does occur, the streamline path becomes more complicated.

The stripper effectiveness was evaluated utilizing equation [14] and plotted against pressure ratio, p_2/p_1, as a function of Mach number in Figure XIII. As theorized by Cates (16), the stripper has significant effect on flow rate. Figure XIV shows $\Phi - \Psi$ curves at $M_{t'} = .28$ and $M_{t'} = .34$ for the original

FIGURE X

HEAD-FLOW CURVES FOR PUMP

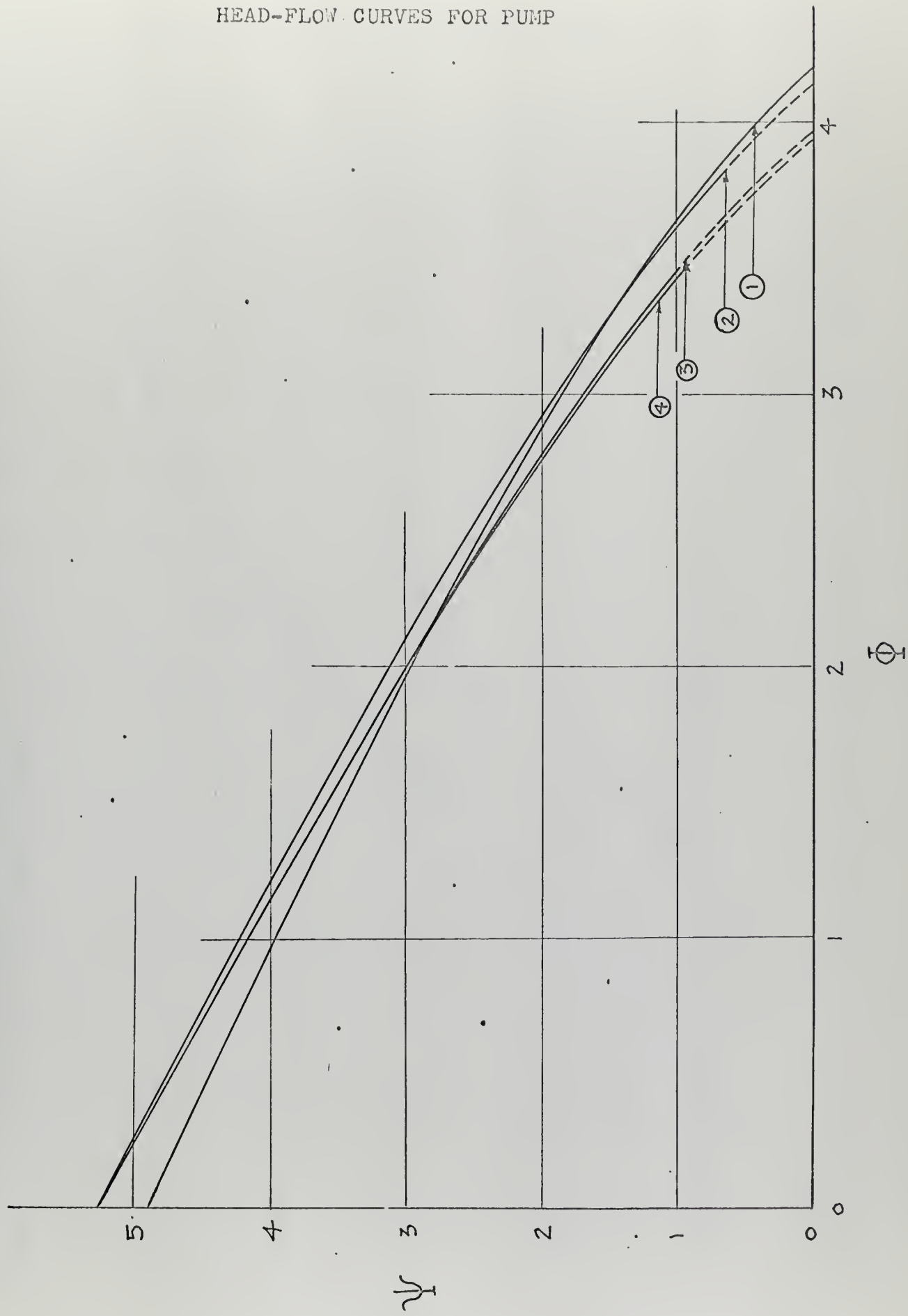

FIGURE XI

EFFICIENCY VS. FLOW RATE FOR PUMP

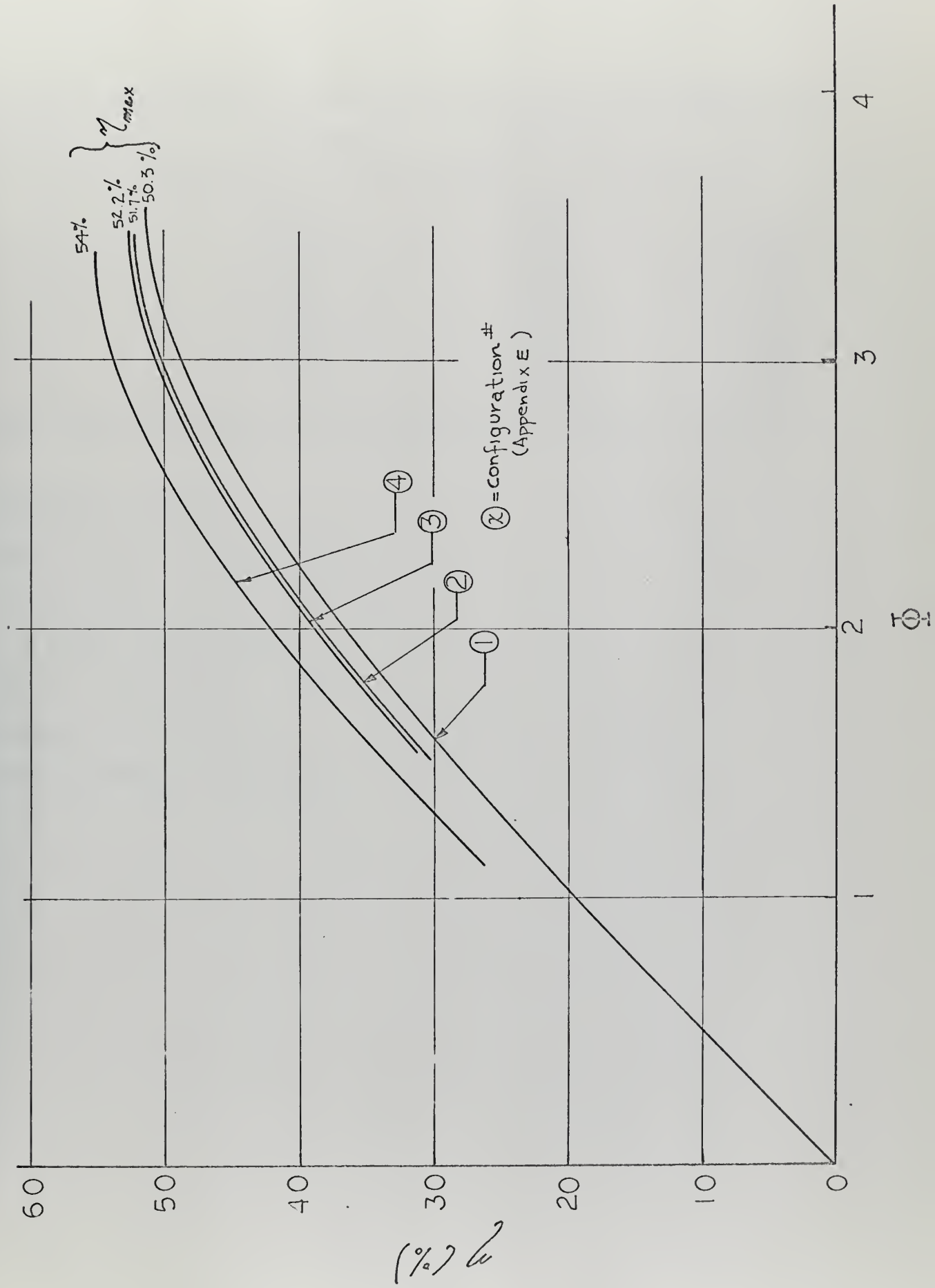

TABLE II

Streamline Path Values

Station # = I	V_t(ft/sec)	V_c'(ft/sec)	A_i(in^2)
0	92.3	26.5	———
1	84.45	26.6	0.10693
2	78.65	28.3	0.1311
3	72.40	31.4	0.1557
4	65.55	33.8	0.1676
5	59.90	28.3	0.1836
6	49.05	23.8	0.2073
7	37.50	19.7	0.2314
8	0	18.35	0.5074

Calculated Values:

Total θ for one path = 76.25°

Average number of passes = 4.15

Q_c = 0.932 ft^3/sec/pass

$Torque_{in}$ = 0.386 ft. - lb.

$Power_{in}$ = 0.140 hp.

Actual $Power_{in}$ = 0.180 hp.

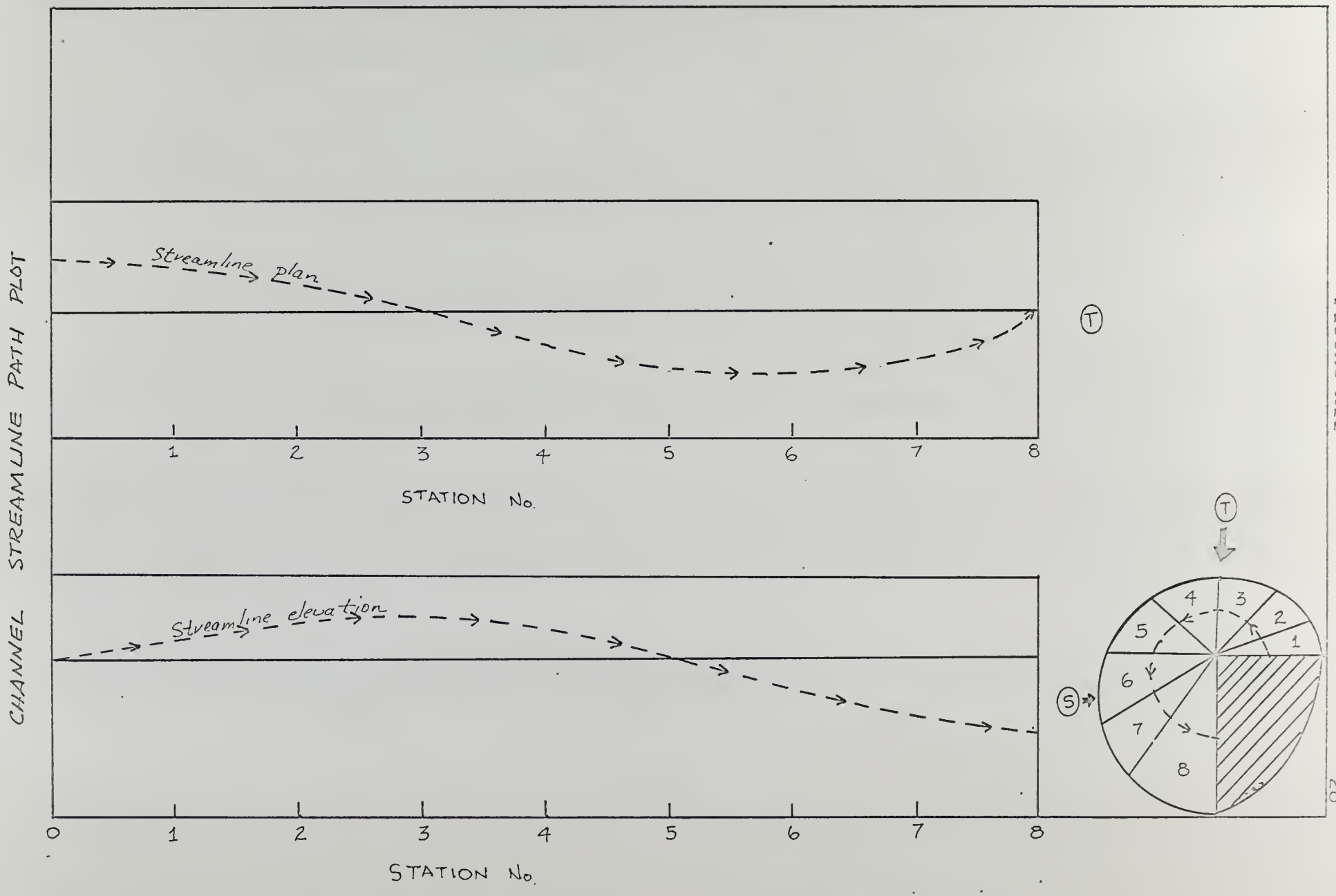
CHANNEL STREAMLINE PATH PLOT
Streamline plan
1
2
3
4
5
6
7
8
STATION No.
T
Streamline elevation
0
1
2
3
4
5
6
7
8
STATION No.
T
S
1
2
3
4
5
6
7
8

FIGURE XII

FIGURE XIII

STRIPPER EFFECTIVENESS

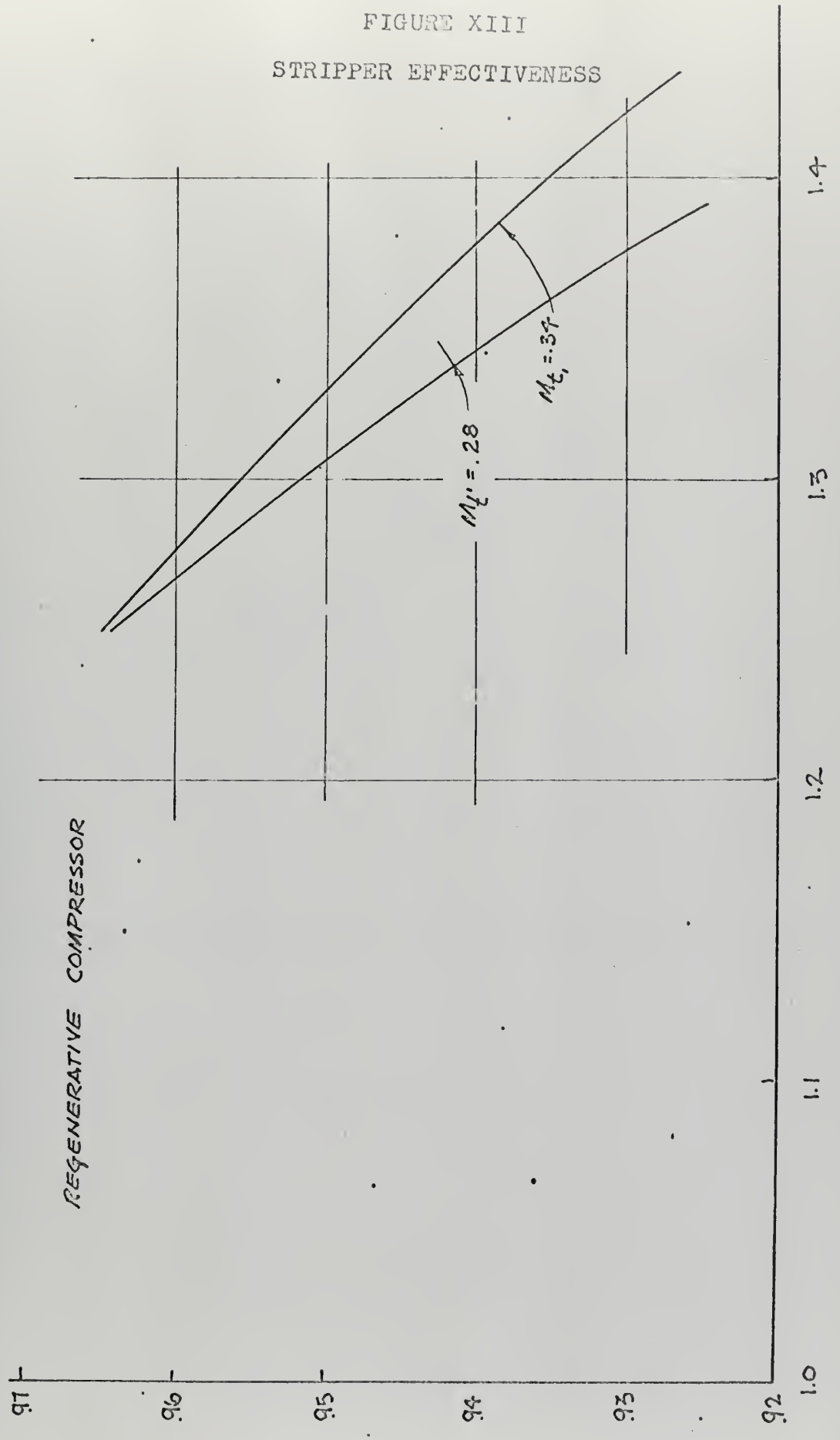

FIGURE XIV

COMPRESSOR HEAD-FLOW CURVES
CORRECTED FOR ξ

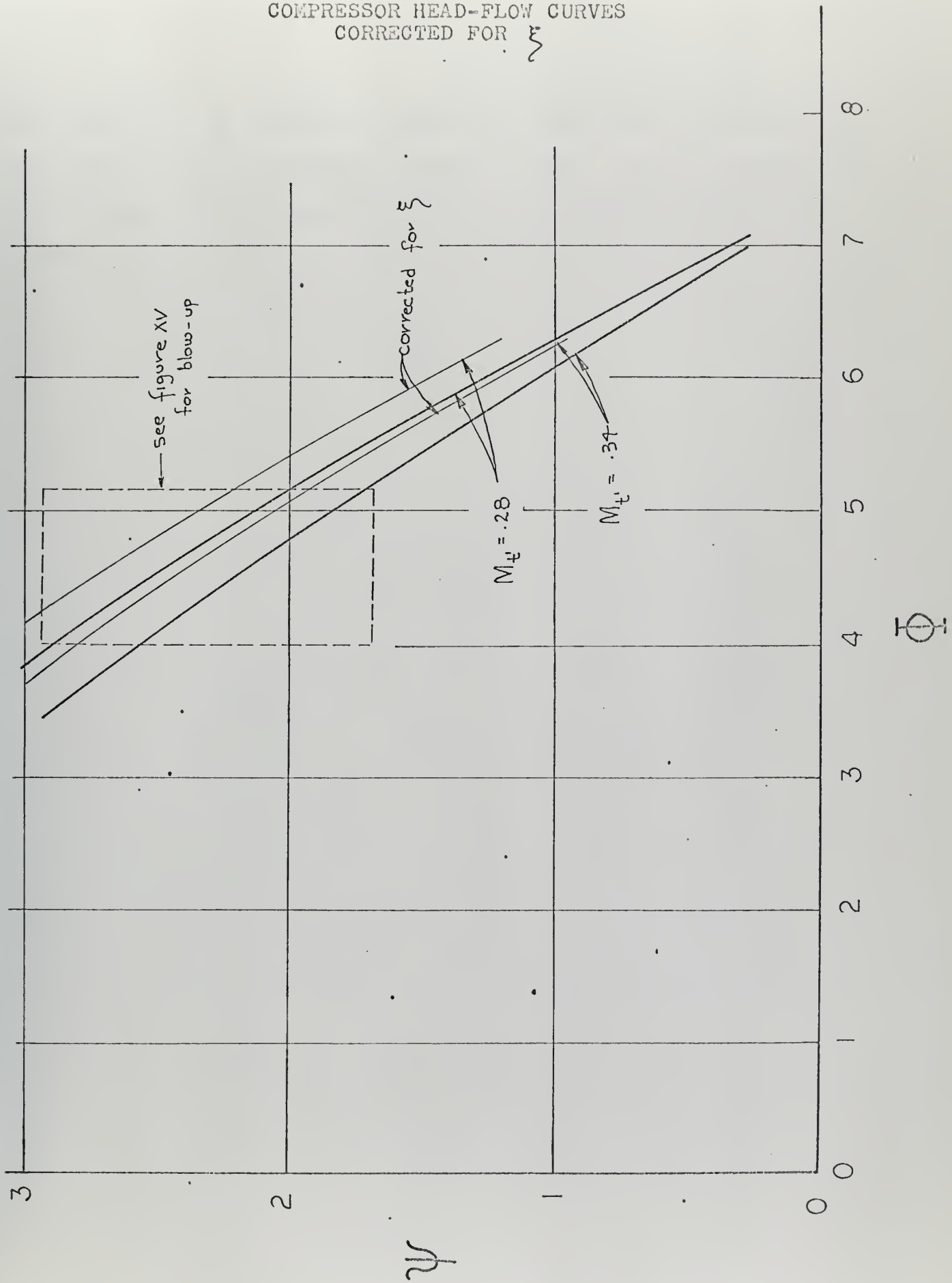

machine and for those same curves corrected for stripper carry over. Figure XV is a detailed view of a section of Figure XIV. The change in Φ between original and corrected curves is shown in Figure XVI as a function of Mach number. It can be seen that the stripper loss becomes significant at high Mach numbers and high heads.

FIGURE XV

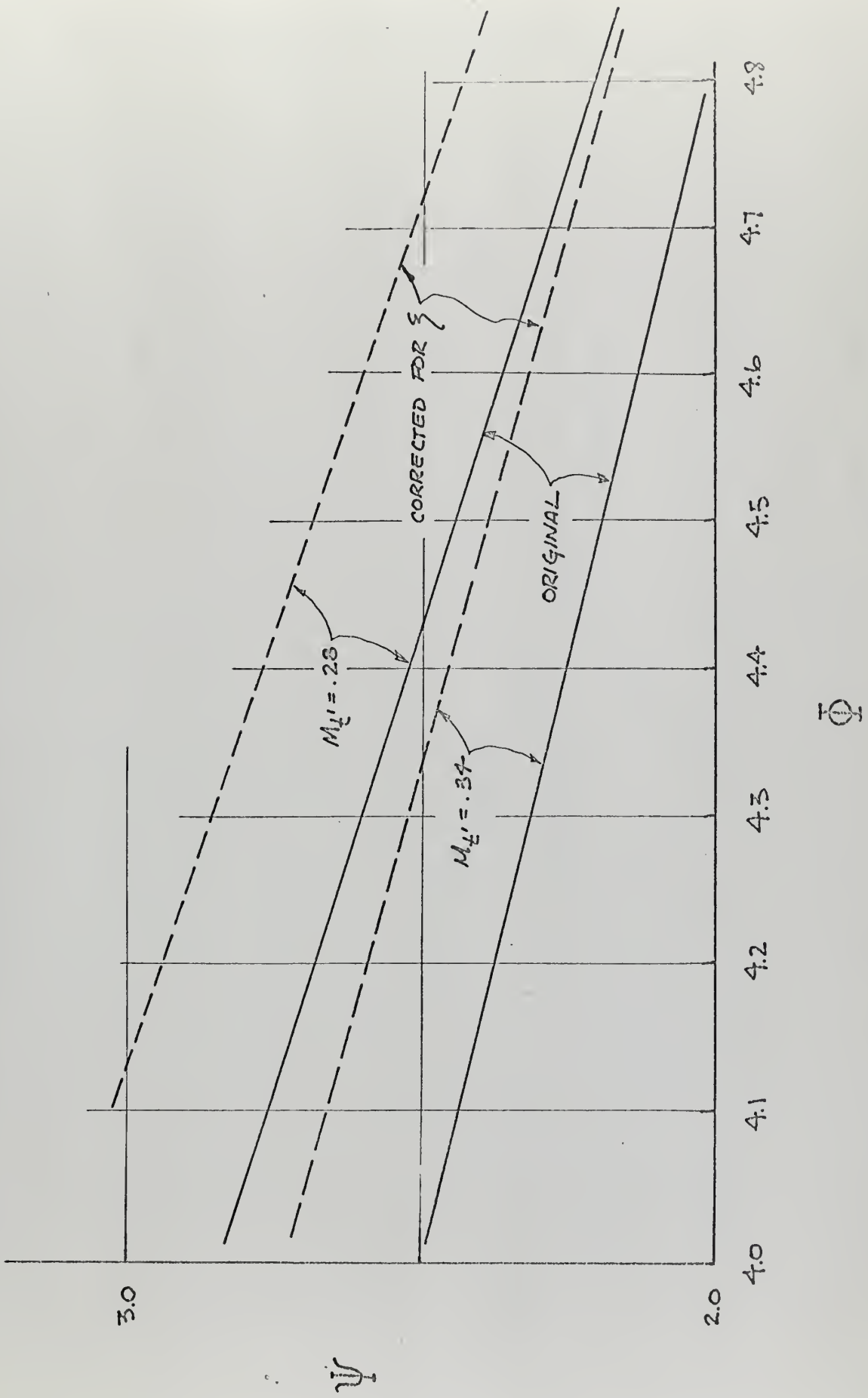
4.8
4.7
4.6
4.5
4.4
4.3
4.2
4.1
4.0
Φ
2.0
3.0
ψ
CORRECTED FOR ξ
ORIGINAL
$M_{4'} = .28$
$M_{4'} = .34$

FIGURE XVI

ORIGINAL AND CORRECTED $\Delta\Phi$
PLOTTED VS. HEAD

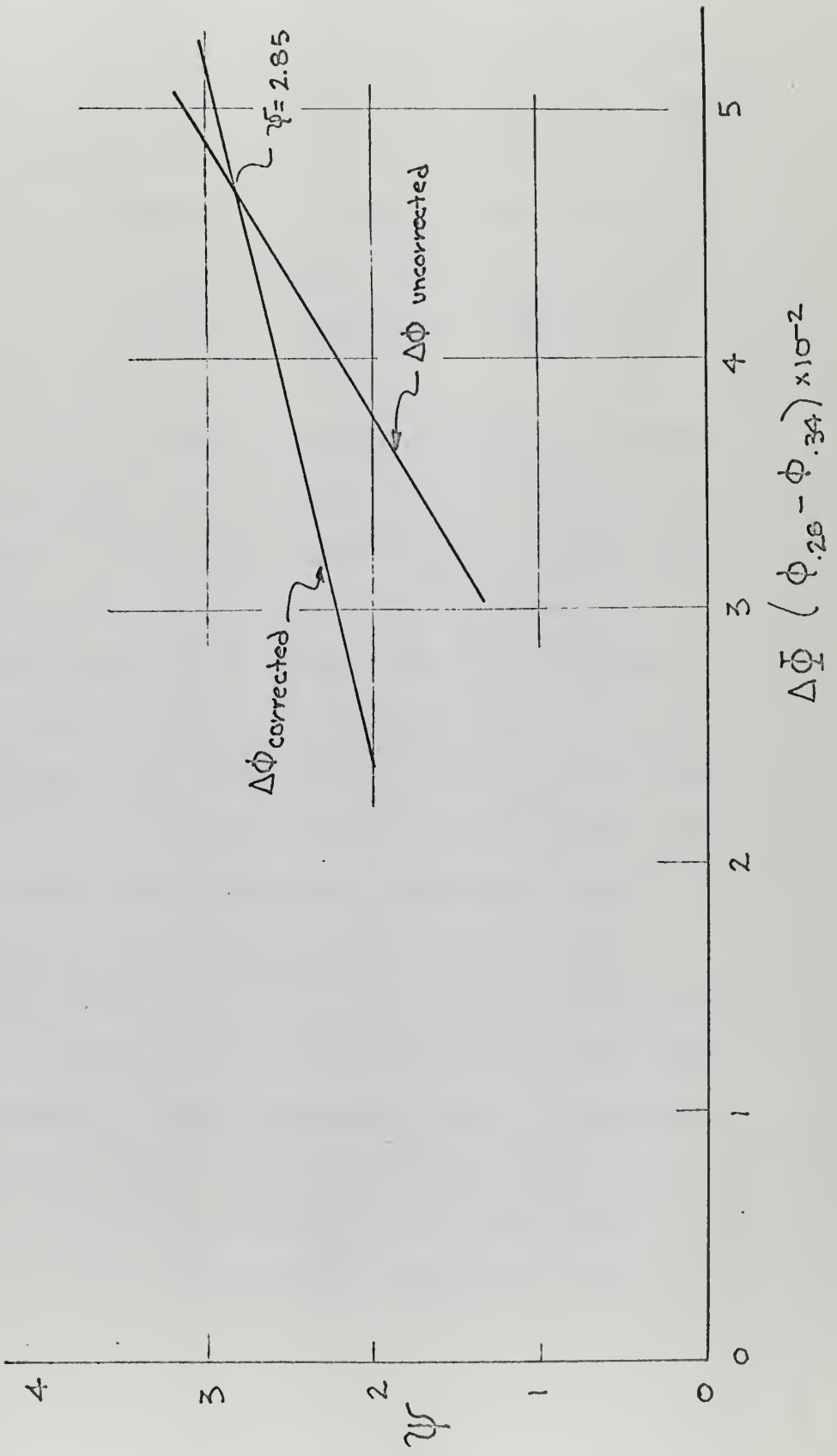

IV. DISCUSSION OF RESULTS

The primary objective of this study is to evaluate certain methods of loss reduction in the inlet and exit portions of a peripheral pump. In addition, investigation into stripper effectiveness and streamline through the machine was done to gain some insight into areas of possible improvement in other portions of the pump. The experimental machine was termed a pump simply because the density changes were unnoticeable at the Mach numbers realized. The machine approaches the compressible range when impeller tip Mach number exceeds about 0.2.

The pump was run at two speeds, 2,000 and 3,000 rpm, which correspond to tip Mach numbers of 0.13 and 0.195, respectively. Under the laws of dynamic similitude, dimensionless performance curves of pump data should be identical. Investigation of the failure of the dimensionless data to match, led to the finding of varying motor rotational losses at 3,000 rpm while at 2,000 rpm they remained constant. For this reason, the 3,000 rpm data was ruled invalid. It is recommended that any future test with this machine be conducted with an accurate dynamometer and the use of a motor more closely matched with pump power output.

The first runs were taken with the pump in the original configuration, which, by itself, was an improvement over test pumps uncovered in the literature. This improvement was in the open-channel design which is nearly circular in cross-section rather than the box-shaped sections of previous tests. This change produced a significant increase in the maximum efficiency which is

50.3 per cent where as Wilson (6) reported a maximum officiency of 45 per cent on the STA-RITE TH-7. The reason for this vast improvement is the reduction of losses in the open channel by the rounding or contouring of the walls to more closely follow the helical streamlines; whereas, a square-shaped channel has corners and presents many areas of possible flow stagnation and even, flow reversal.

The first change in the pump was to block off the open-channel portion of the exit area. This improved maximum efficiency from 50.3 per cent to 51.7 per cent while also showing some increase in maximum head and no change in flow at maximum efficiency point. Improvement was due to the higher head realized since the blocked exit forced the flow to exit from the blade tips and precluded any pressure loss in the open channel by mixing. This is born out by the fact that more power output was realized even though input power remained constant.

The second alteration was to reduce the open channel area during the final streamline path circulation in conjunction with the half-blocked exit. The reason was to compensate for the increased area above the blades and thus keep the open-channel area constant to the exit. This modification increased maximum efficiency to 52.3 per cent and slight decrease in head was realized at maximum efficiency, which accounts for the lower power output. Improvement was the result of the streamlines at the exit being more closely aligned with the exit direction and thus not being forced to change direction by the channel wall in order to leave the pump and losing momentum in the process. The reduction

in power input substantiates this argument. The effect on flow was very small and can be explained by the fact that the bottom 67 per cent of the open channel carries only 50 per cent of the total through flow. It is apparent that the increased area above the blades due to the exit channel has already begun to take more of the flow. A recommendation would be to start the exit area expansion even further back in the channel and again contour the remaining section of open channel to compensate for the gain in area, thus producing a true radial flow at the exit.

The final alteration was to block off the inlet area over the rotor blades and slope the inlet so that incoming fluid would follow the channel only and thus assist in continuing the circulatory flow pattern established by the carry-over flow instead of attempting to suppress it. The channel end of the inlet block was curved to conform to the channel geometry, thus forcing the carry-over flow to begin circulating rather than obstructing the incoming flow. It was observed in the streamline development that the circulatory flow did not become fully established until it had passed through at least 30 per cent of the working section of the pump; at which point, the pressure gradient was almost a constant value. If the circulatory flow can be established sooner in the channel, less work is necessary to maintain a given flow due to a reduced overall pressure gradient. This modification was coupled with configuration 3 and produced a sizeable increase in efficiency to 53.8 per cent which is a 6.9 per cent increase from the original machine.

The carry-over flow is an important portion of the losses

within a peripheral compressor. When the blade slot travels through the stripper section it carries with it a volume of fluid which is at a higher pressure than that of the incoming flow. Thus, when this fluid encounters the lower pressure of the entrance, it expands and therefore decreases the volume available for incoming flow, the result being a loss in flow rate. Since the amount of carry-over flow, $(p_2/p_1)B_v\omega$, is dependent upon pressure ratio and the rotational speed, it follows that the carry-over flow will have greater effect at high pressure ratios and high tip Mach numbers. The analysis of the stripper section proved this to be correct (by correction of $\Phi - \Psi$ characteristics for stripper effectiveness produced from data provided by AIRCO (17) for a regenerative compressor). It was seen that at high pressure ratios the loss in flow through the stripper became significant. When the flow curves were corrected for carry-over loss, the reduction in flow was markedly reduced as compared to the original curves. The difference in loss between original and corrected differences was larger at lower pressure ratios; and this is understandable, since this is the region of higher flow rate and thus a greater percentage of the flow can be lost. The crossing of the $\Delta\Phi$ curves in Figure XVI occured at a head coefficient corresponding to half the maximum possible flow rate (i.e. flow rate at zero head). The significance of this effect could not be ascertained; but it was noticed that the maximum power output also occurs at approximately half maximum flow, so perhaps there is a connection between the symmetry of the power curve and carry-over losses.

For the development of the streamline path analysis, several assumptions were made that were not entirely realistic but necessary for ease of computation. The assumption of a zero value for blade entrance factor α was close to the actual case as $\alpha = 0$ at a flow only slightly less than that at maximum efficiency (for this pump). Therefore, the true value of α was small enough to be considered zero for purposes of the investigation. The assumptions of a non-viscous medium and solid body, circulatory flow are the most unrealistic; but in view of the desired simplicity, they were not unreasonable. In actual fact, the inclusion of viscous flow and the associated velocity gradients result in an equation in Bessel Functions as noted in Oelrich (14). With all the assumptions, the calculated power of 0.147 horsepower versus 0.180 horsepower actual is quite close. The basic method used recommends itself to computerized calculations of the streamline path with viscous conditions and reverse flows included.

V. CONCLUSIONS AND RECOMMENDATIONS

Test data obtained on an experimental peripheral pump and that from an outside organization, AIRCO (17) , on a peripheral compressor were used to evaluate the effects of pump modifications on inlet and exit losses, develop a streamline analysis for circulatory flow, and estimate the influences of stripper action at high Mach numbers. Data was presented as plots of dimensionless parameters. Generally, the data confirmed the predictions that were made. The following conclusions may be drawn from an analysis of the data:

1. The streamlining of the open channel cross-section produced significant improvement in pump performance because of reduction of open channel losses of the circulatory flow.

2. The visualization of the flow pattern is important to the proper design of the open channel, blades, inlet and discharge regions.

3. Modifying the exit and entrance to conform to the operating directions of streamlines leads to a significant increase in overall pump efficiency due to a reduction in the input power requirements. Only a small change in output

power was realized by these modifications.

4. A portion of the reduction in flow rate that occurs at high tip Mach numbers can be attributed to the carry-over flow. At high pressure ratios, the carry-over flow is most significant as this is the region of largest loss in flow rate.

5. In order to decrease the carry-over flow, a reduction in pressure ratio, blade volume, and/or Mach number is necessary.

6. The power output curve of a peripheral pump is symmetric about the half maximum flow point, which is attributed to the essentially linear flow-head curve.

7. The power input, determined by the helical streamline analysis, agreed within 20 per cent of the actual measured power. This was deemed satisfactory in the light of the simplifying assumptions made for calculations.

8. Efficiencies as great as 54 per cent were measured in the peripheral pump.

The following suggestions and recommendations are made for future research and study in the area of peripheral pumps and compressors:

1. Increased study is needed into high Mach number effects on efficiency.

2. The inlet/outlet region and stripper section require more study since there are interacting influences between them. Introduction of the incoming flow directly into the blade edges coupled with an angled blade to produce lower blade entrance losses is one possible approach to this problem. A determination of optimum stripper length as a function of blade size would be desirable.

3. The adoption of a computerized technique for the streamline analysis to include viscous effects and reverse flow might be desirable since any introduction of viscosity results in complicated Bessel Functions (14).

4. The influence of Reynolds number on performance should be studied since in all previous analysis it has been neglected. Although, at high Mach numbers, Reynolds effect may be significant.

5. A heat transfer analysis could be developed and compared to the results for the assumed adiabatic conditions.

A P P E N D I X

APPENDIX A

Pump Dimensions

$a = 1.03$ in.

$b = 0.775$ in.

$c = 0.60$ in.

$d = 0.90$ in

$f = 0.756$ in.

$r_0 = 4.37$ in.

$r_1 = 4.678$ in.

$r_2 = 5.50$ in.

$r_3 = 5.802$ in.

$D = 11.0$ in.

$A_c = 1.6916$ in.^{2}

$B_v = 0.472$ in.^{3}

$r_g = 5.325$ in.

$\sigma = 0.960$

$K_1 = 0.9611$

$K_2 = 1.1302$

APPENDIX B

Nomenclature

b = axial depth of blading

d = axial depth of open channel

D = impeller diameter

H = head and head loss

K = pump constants

p = pressure

P = power

Q = flow

r = radius

A_c = cross-sectional area of open channel

N_s = specific speed = $N \sqrt{Q} / H_t^{3/4}$

M = Mach number

N = impeller tip rotational speed, RPM

U = impeller velocity, ft/sec

k_t, k_c = loss cofficients in regenerative theories

B_v = impeller blade slot volume

η = efficiency

γ = specific weight, ft^3/lb

α = blade entrance factor

σ = blade exit factor

ω = angular speed of impeller, radians per unit time

ξ = stripper effectiveness

θ = angular position in pump

θ_s = stripper angle

ψ = head coefficient, $g_c H/\omega^2 D^2$

ϕ = flow coefficient, $Q/\omega D^3$

T = temperature

V = velocity

$g = g_c$ = gravitational constant

Subscripts

1 = blade entrance, control volume inlet

2 = blade exit, control volume exit

c = circulatory flow

g = centroid of open channel area

t = tangential flow, velocity or head

sb = solid body rotation

t' = tip

I, i = streamline

s = stripper

Superscripts

' = Average value

FIGURE XVII

POWER TRAIN EFFICIENCY
AT 2,000 RPM

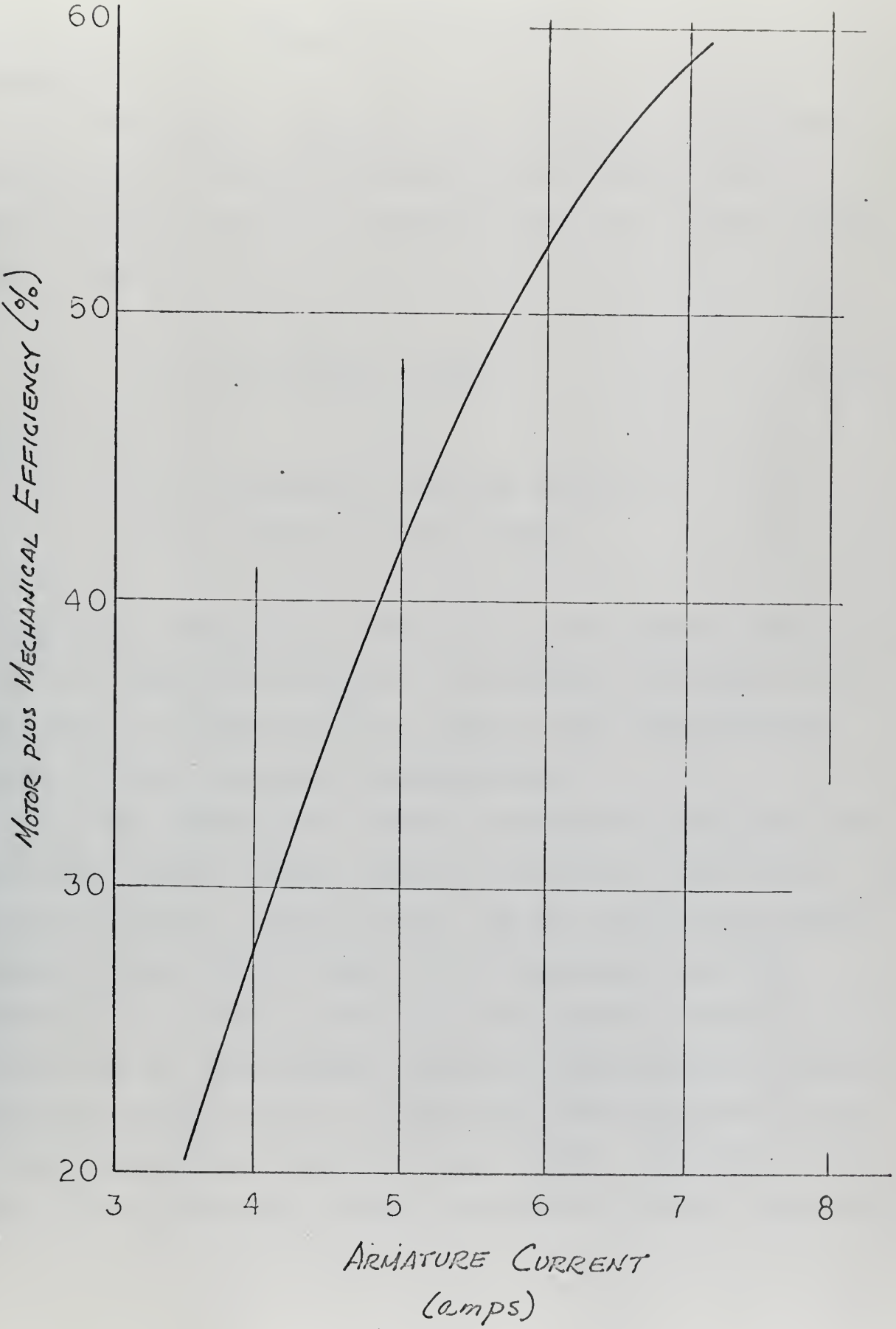

APPENDIX D

Streamline Development

Procedure:

The development of the flow path through the pump is of interest since it shows the number of passes made by the pumped medium which in turn determines the input torque, referring to Figure XII,

$$T = \rho Q_c (V_{t_8} r_8 - V_{t_0} r_0) \quad , \qquad [15]$$

where,

V_{t_i} = tangential velocity at area i

r_i = radius to area i center

In addition, areas of equal flow rate can be located. This allows the designer to incorporate improvements with some reasonable idea as to what changes to expect rather than having to resort to trial and error experimentation.

For this development only one condition was utilized, that being the original machine running at 2,000 rpm with maximum flow of 0.525 ft^3/sec. A plot of head rise vs. angle in the pumping channel, Figure XVIII, shows that the tangential pressure gradient in the last 75 per cent of the pumping channel is essentially linear. This pressure gradient is maintained by the loss of angular momentum of the working fluid (in this case air) as it moves through and around the open channel. The air is subjected to an additional pressure gradient as it moves around the

FIGURE XVIII

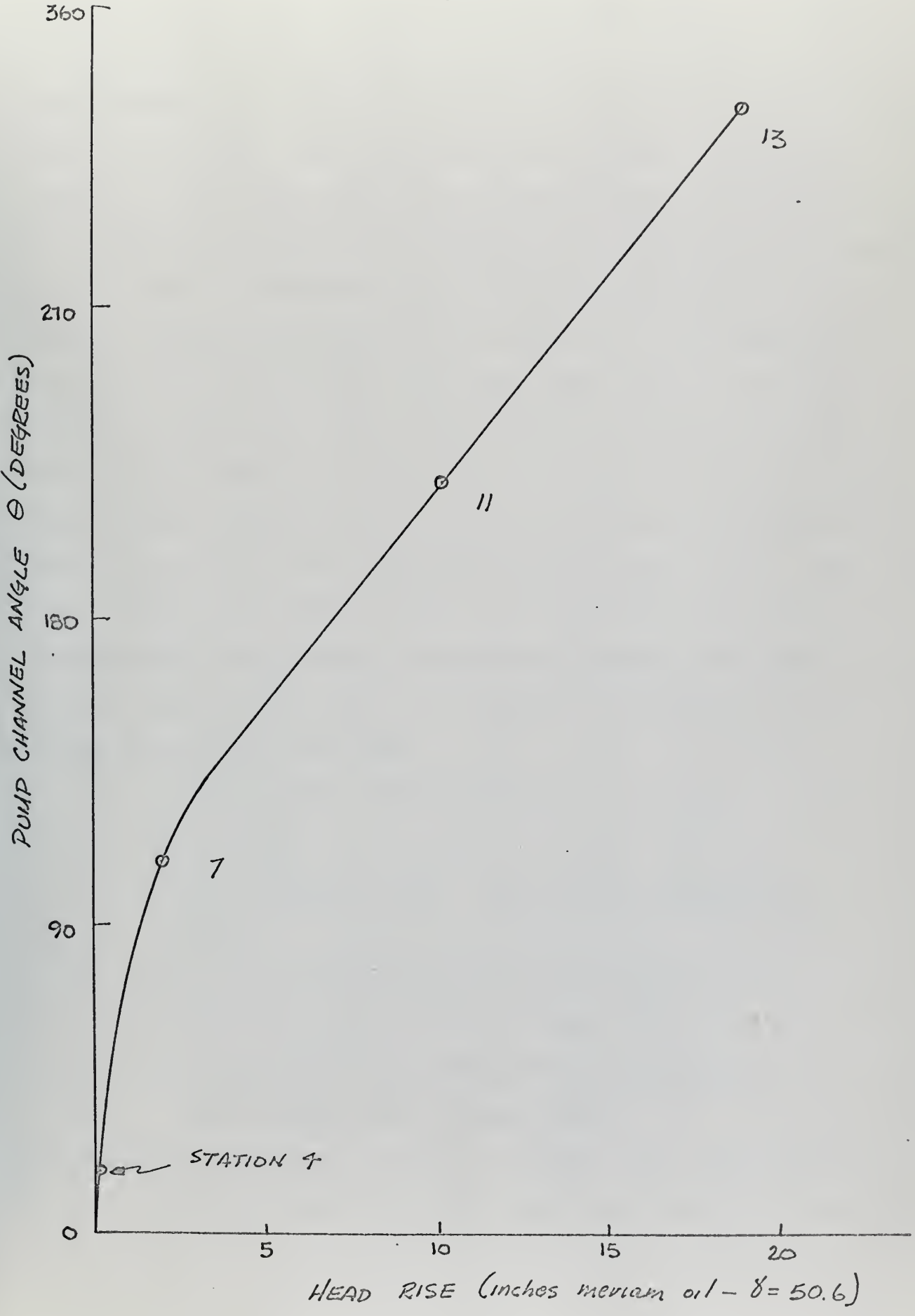

open channel from tip to root of the impeller blades. As can be seen in Figure XIX, this is essentially a favorable pressure gradient, thus tending to reduce the amount of momentum given up per $\Delta\theta$. This then lengthens the path in the open channel. It is noted that the pressure gradient, $\Delta p/\Delta\theta$, is almost constant irrespective of channel cross-section location.

In order to facilitate the calculations in light of the varying pressure gradient the streamline sees, the tangential path length, θ, was broken into eight equal parts, each part comprising 1/8 of the total through flow. The pressure gradient was then modified as shown in Figure XIX to account for the cross-section change in Δp. The first and last sections were taken to be equal to the tangential gradient end points. The other sections were then assumed to be subjected to a linear gradient that would remove the momentum from what was left at station 1 and end with what was needed at station 8. The following assumptions were made:

1. Non-viscous, adiabatic flow.
2. $V_c = Kr_1$
3. The tangential flow through each section was $Q/8$.
4. Q_c for one pass from tip to tip equals Q plus the amount carried in the blade volume, (since only the open-channel volume is effective for through flow).

The resultant streamline is shown in Figure XII. The values of V_t, V_c, Q_c, station areas and torque input are listed in Table II.

FIGURE XIX

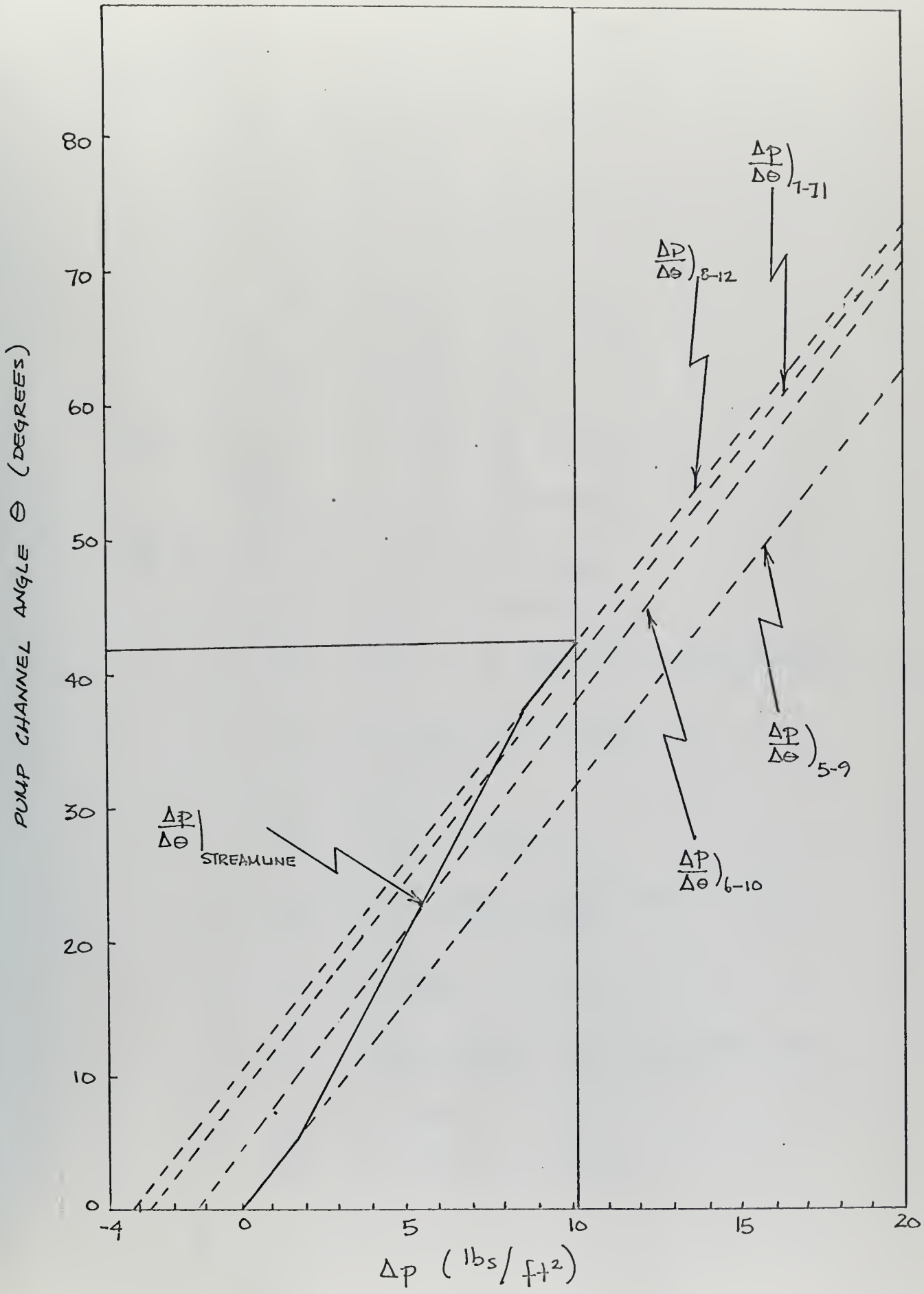
PUMP CHANNEL ANGLE θ (DEGREES)
80
70
60
50
40
30
20
10
0
-4
0
5
10
15
20
Δp (lbs/ft²)
Δp/Δθ)7-11
Δp/Δθ)8-12
Δp/Δθ)5-9
Δp/Δθ)6-10
Δp/Δθ|STREAMLINE

Sample Calculations (Subscripts Refer to Figure XII)

Constants: $r_0 = 5.5$ inch

$U_{tip} = r\omega = 96.1$ ft/sec

$\sigma = 0.96$

$V_0 = U_{tip}\,\sigma = 92.3$ ft/sec

$\alpha = 0$

$\Delta p = \frac{1}{2}\rho V_0^2 = 10.0$ #/ft^2

$\theta = 42.875^\circ$, Figure XIX

$d\theta = 5.235^\circ = \theta/8$

tip outlet area $= 0.000452$ ft^2/degree

$\left.\frac{dp}{d\theta}\right|_{1\text{-}8} = 0.314$ #/ft^2/degree

$\left.\frac{dp}{d\theta}\right|_{2,3,4,5,6,7} = .214$ #/ft^2/degree

$Q' = Q/8 = .0656$ ft^3/sec

$$V_1 = \left[V_0^2 - \frac{2}{\rho}\left.\frac{dp}{d\theta}\right|_1\right]^{\frac{1}{2}} = 84.45 \text{ ft/sec}$$

$$A_1 = \frac{Q'}{\frac{V_0 + V_1}{2}} = 0.10693 \text{ in}^2$$

$$S_1 = \frac{2A_1}{r_1'} = 0.543 \text{ in}$$

$$Q_c = \int_0^{r'} V_c b\,dr = bk\int_0^{r'} r\,dr$$

$$K = \frac{2\,Q_c}{br'^2}$$

$Q_c = 0.525$ ft^3/sec for streamline from tip to root

$K_0 = 79.25$

$$V_{c'_0} = K_0\,\frac{r_0'}{2} = 26.5 \text{ ft/sec}$$

Total distance of streamline from tip to tip

= 42.875° + mean distance through blades x blade speed/mean V_c through blades

$$= 42.875 + \frac{(0.0625)(209)}{22.475}$$

$$= 76.25°$$

Average number of passes

= working angle/angle per pass

$$= \frac{316.5}{76.25} = 4.15$$

$$\text{Total } Q_c \text{ per pass} = \frac{0.525}{42.875} \times 76.25 = 0.932 \text{ ft}^3/\text{sec}$$

$$T = \text{Torque input} = \rho Q_c r_0 V_0$$

$$= (.00237)(.932)(4.15)(5.5/12)(92.3)$$

$$= 0.386 \text{ ft.-lb.}$$

$$\text{Power in} = \frac{T\omega}{550} = .1465 \text{ hp.}$$

Actual measured power in = 0.180 hp.

$$\text{Power error} = \frac{.18 - .1465}{.18} \times 100 = 18.6 \text{ per cent}$$

APPENDIX E

FIGURE XX

COMPRESSOR MODIFICATION CONFIGURATIONS

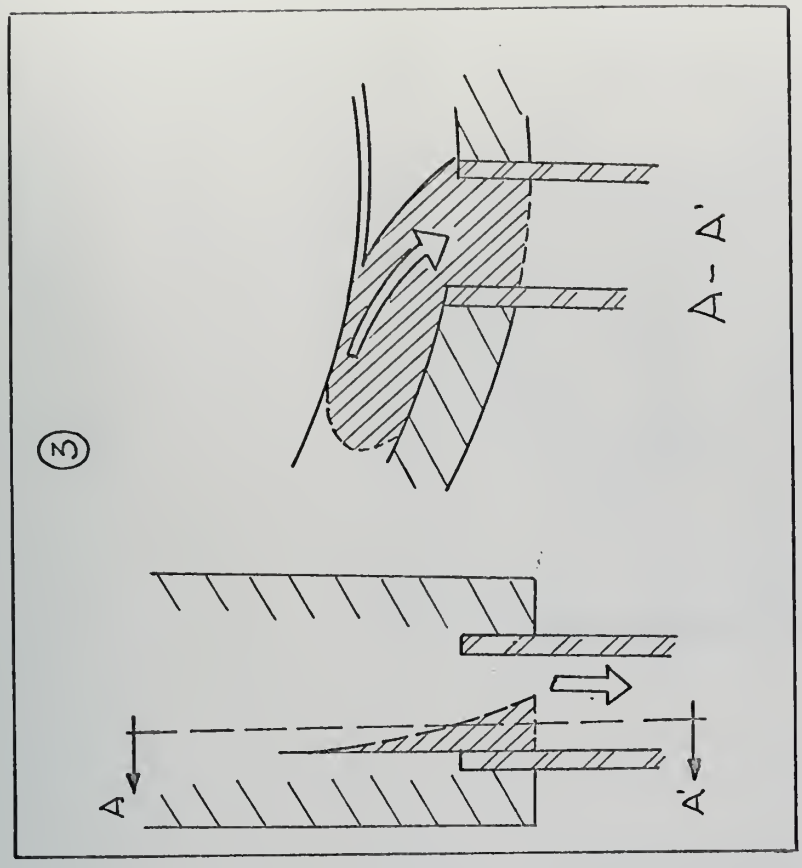

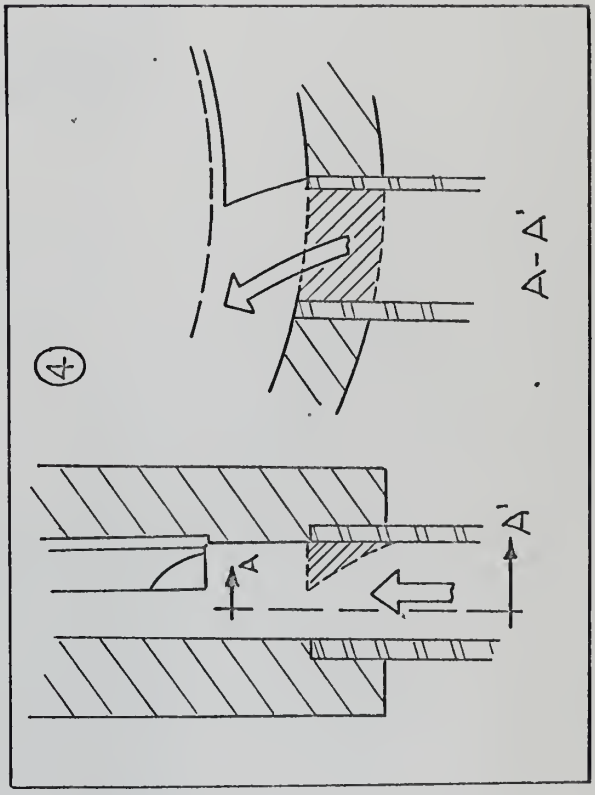

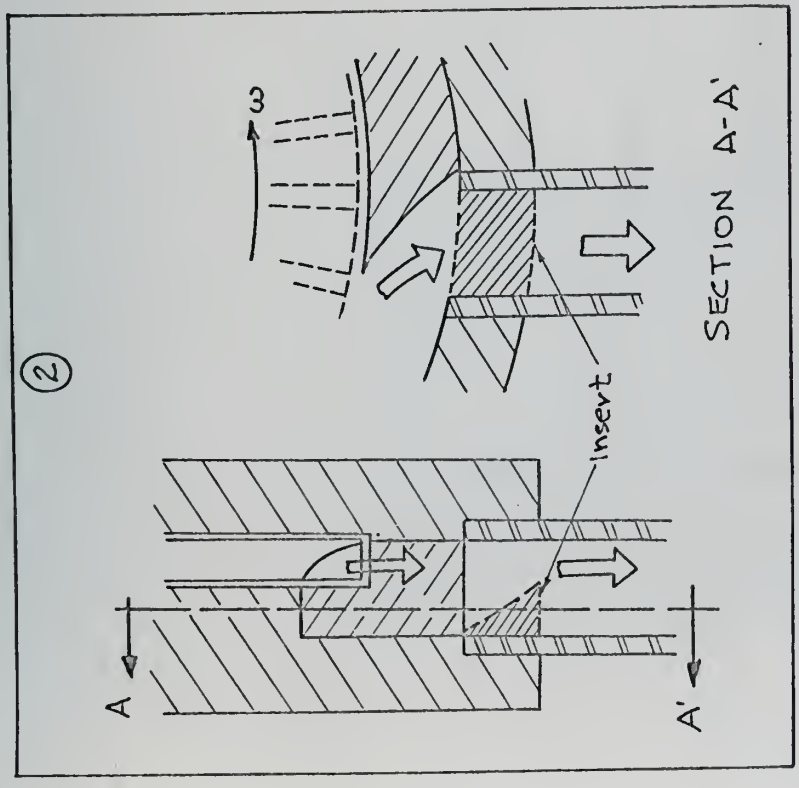

APPENDIX F

FIGURE XXI

PUMP DIMENSIONS

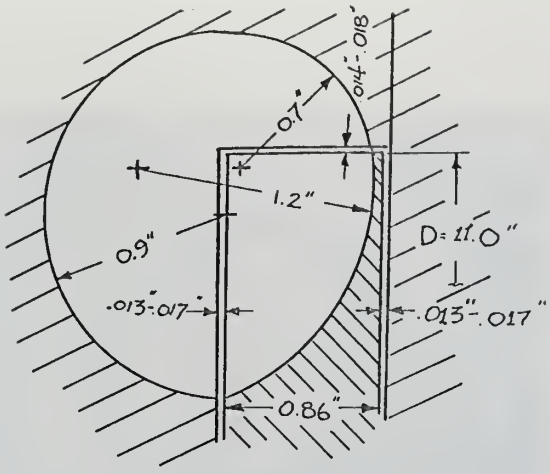

(a) Open Channel and Blade

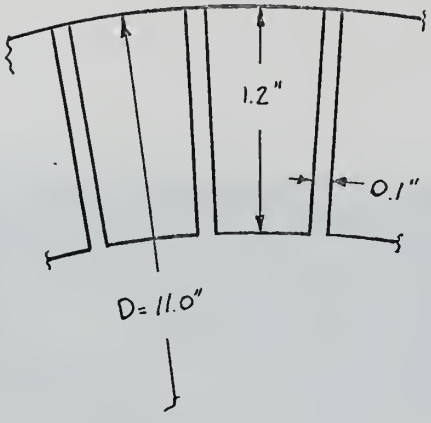

(b) Impeller (48 Blades)

FIGURE XXII

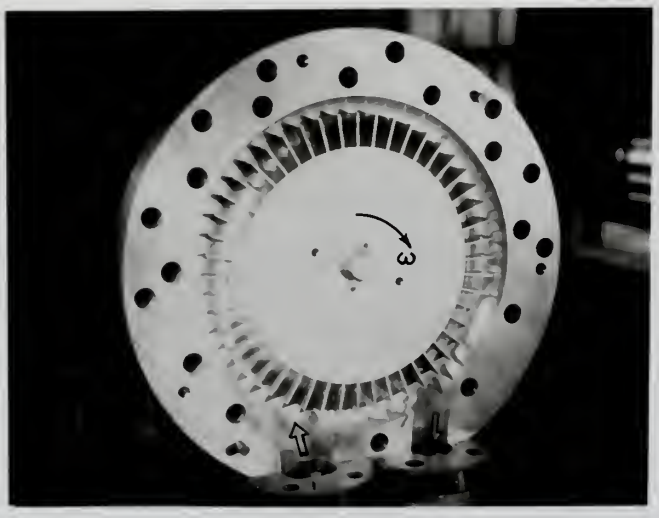

(a) IMPELLER SECTION

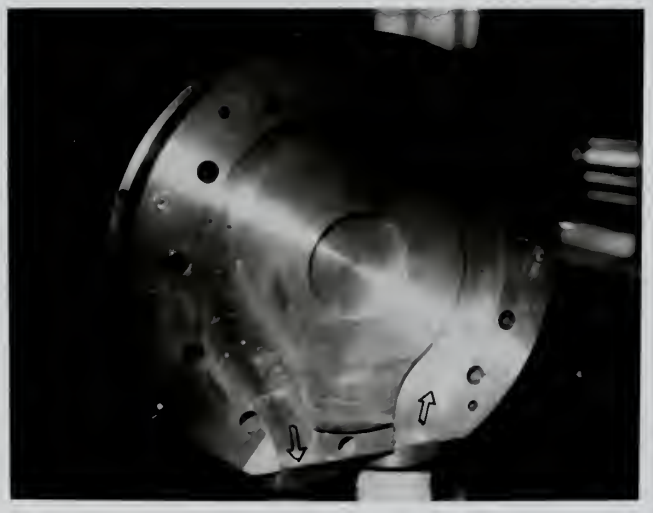

(b) OUTER COVER SECTION

A BIBLIOGRAPHY OF THE MOST IMPORTANT SOURCES

1. Balje, O. E., "A Study on Design Criteria and Matching of Turbomachines," ASME paper No. 60-WA-231, January, 1962.

2. Senoo, Y., "A Comparison of Regenerative Pump Theories Supported by New Performance Data," ASME paper No. 55-SA-44, April, 1955.

3. Iverson, H. W., "Performance of the Periphery Pump," Trans. ASME, vol. 77, 1955, pp. 19-22.

4. Discussion of reference (3) by W. E. Wilson, pp. 24-25.

5. Discussion of reference (3) by A. M. Wright, pp. 25-27.

6. Wilson, W. A., Santalo, M. A. and Oelrich, J. A., "A Theory of the Fluid-Dynamic Mechanism of Regenerative Pumps," Trans. ASME, vol. 77, 1955, pp. 1303-1311.

7. Discussion of reference (6) by G. F. Wislicenus, pp. 1314-1315.

8. Senoo, Y., "Theoretical Research on Friction Pumps," Reports of Research Institute for Fluid Engineering, Kyushu University, vol. 3, No. 11, 1954.

9. Senoo, Y., "Influences of the Suction Nozzle on the Characteristics of a Peripheral Pump and an Effective Method of Their Removal," Reports of Research Institute for Applied Mechanics, Kyushu University, vol. 3, No. 11, 1954.

10. Wilson, W. E., "Analysis of Turbine Pumps," Product Engineering, vol. 18, October, 1947, pp. 163-166.

11. Lazo, L. and Hopkins, T., "Theoretical and Experimental Analysis of a Regenerative Turbine Pump," thesis, Massachusetts Institute of Technology, Cambridge, Massachusetts, January, 1953.

12. Lutz, G. F., "Experimental Investigation of the Pressure Distribution in a Regenerative Turbine Pump, the STA-RITE TH-7," thesis, Massachusetts Institute of Technology, May, 1953.

13. Fitzgerald, A. E. and Kingsley, C., Jr., Electric Machinery, McGraw-Hill, 1961.

14. Oelrich, J. A., "Development of an Analysis of a Regenerative Pump," Mechanical Engineers Thesis, Massachusetts Institute of Technology, August, 1953.

thesD78346
Investigation of methods to reduce sucti
3 2768 001 89531 1
DUDLEY KNOX LIBRARY